vending machine

spare parts manual

www.rheavendors.com tel: 0039 02 966 551 fax: 0039 02 96 55 086 email: rheavendors@rheavendors.com exclusive property of rheavendors group

cabinet (instant version)

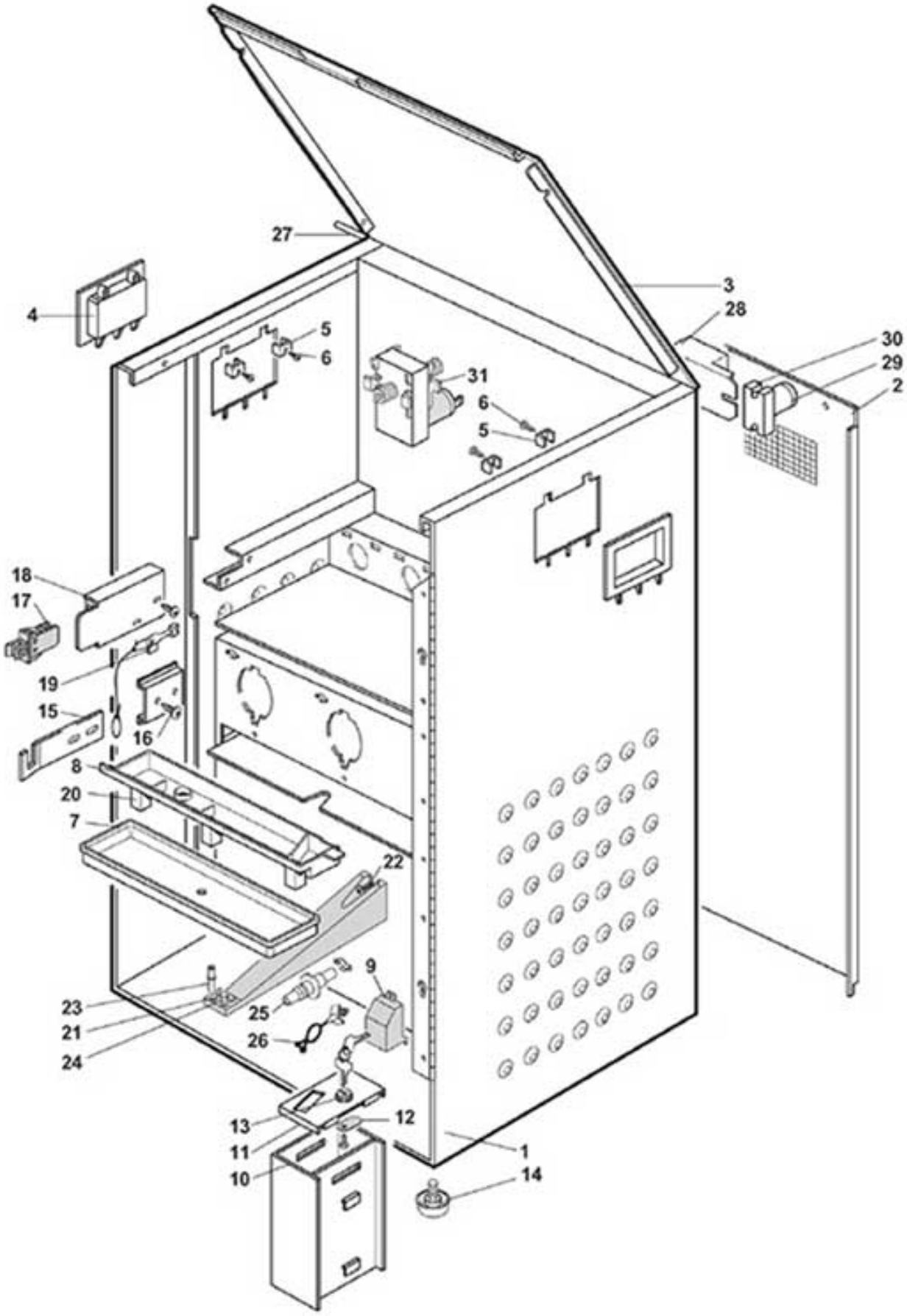

www.rheavendors.com tel: 0039 02 966 551 fax: 0039 02 96 55 086 email: rheavendors@rheavendors.com exclusive property of rheavendors group

cabinet (instant version)		
Pos.	**Code**	**Description**
1/a	Z0010022271NA	CABINET RAL 9005
1/b	Z0010022271	BASE CABINET STRUCTURE H
2/a	Z0010022275CM	REAR PANEL RAL 9006
2/b	Z0010022275CM	REAR PANEL RAL 9006
3	Z0010022117	UPPER COVER
4	Z0010020026NA	HANDLE RAL 9005
5	4600010012	DRINK SELECTION PANEL BRACKET
6	VIT0002028	SCREW ST HEAD CAP M3.9X13
8	Z0010020016V0	TRAP DRAWER RAL 7037
9	Z0010022165R	§ DRIP TRAY SENSOR SUPPORT
10	Z0010022154	COIN BOX
11	Z0010022150	COIN BOX LID
12	SER0001005	LOCK PLATE
13	SER0000020	LOCK MM20 C.3425
14	Z0010020169	MACHINE FOOT D.22X7 M.6X11
15	Z0010022137	LOCK SHAFT HOOK
16	VIT0000030	SCREW HEAD TAP CAP M4X7
17	ELE0002009	BIPOLAR SWITCH 15A 250V
18	Z0010022157	SWITCH SUPPORT
19	Z0270011109CL	§ SERVICE KEY
20	Z0010022131	TRAP CHUTE
21	Z0380011323	NOZZLE HOLDER
22	VIT0002401	SCREW ST HEAD CAP M3.5X9.5
23	Z0380010657NA	ESPRESSO NOZZLE D. 5,7
24	Z0380010656NA	PLUG BLACK
25	Z0080100013	MIXER CONNECTOR
26	FASC000302	CLAMP 14,35-15,25
27	Z0010022124	UPPER LID SHAFT
28/a	ELE0009127	BALLAST 230V
28/b	ELE0009119	BALLAST W4-6-8- 118V
29/a	ELE0009109	BALLAST 4/65W
29/b	ELE0009118	BALLAST 4/22W
30	ELE0009108	BALLAST HOLDER
31	Z0090002113	MOTOR 24 DC 97 RPM
100	Z0010022150R	§ COIN BOX LID

www.rheavendors.com tel: 0039 02 966 551 fax: 0039 02 96 55 086 email: rheavendors@rheavendors.com exclusive property of rheavendors group

rear cabinet

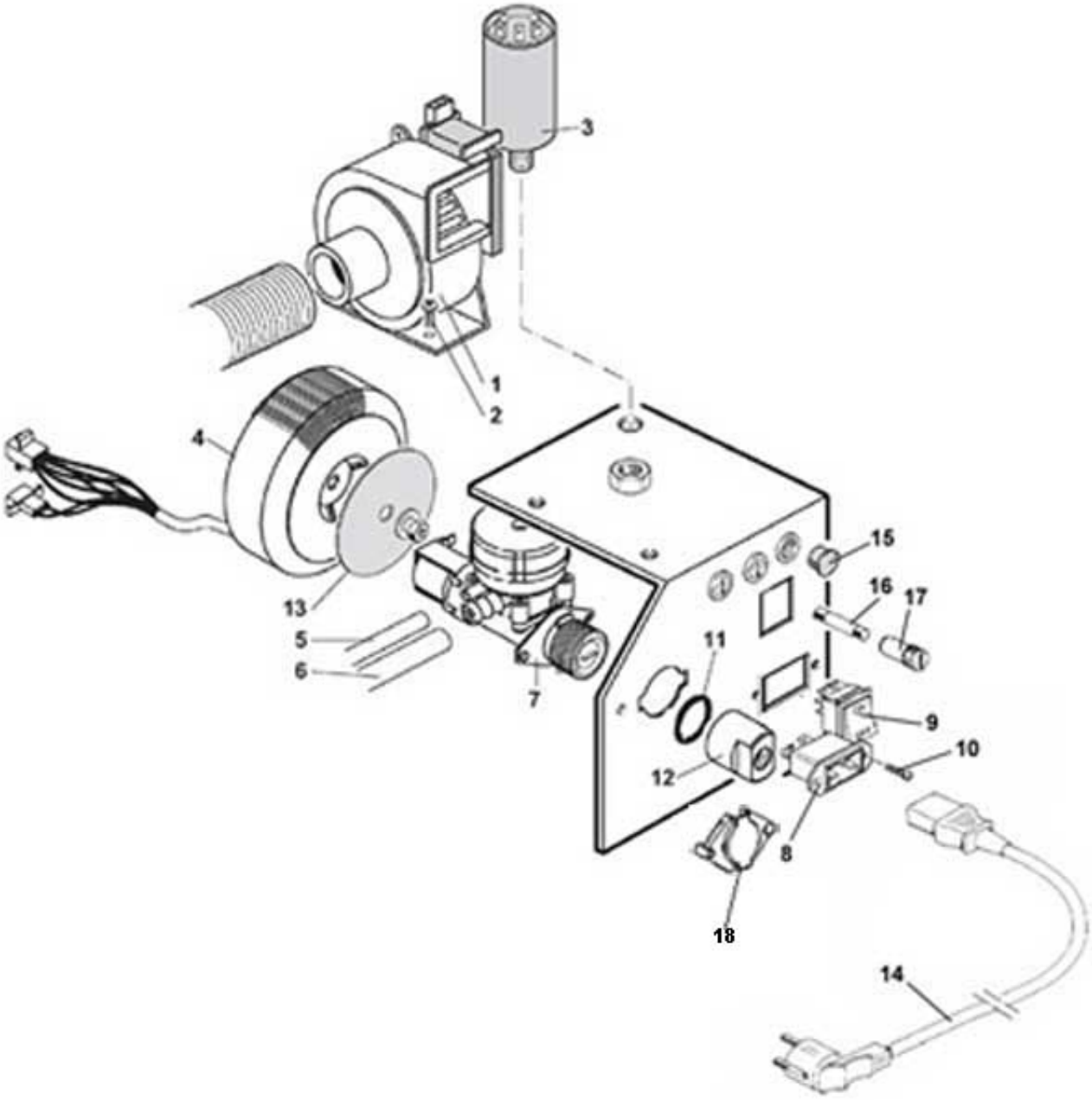

www.rheavendors.com tel: 0039 02 966 551 fax: 0039 02 96 55 086 email: rheavendors@rheavendors.com exclusive property of rheavendors group

rear cabinet		
Pos.	**Code**	**Description**
1	ELE0000459	TRAP 26/50 D. 55
2	VIT0002009	SCREW ST HEAD CAP M3.5X6.5
3/a	ELE0009055	NOISE FILTER 16A
3/b	ELE0009060	NOISE FILTER 16A UL For version UL
4/a	ELE0000569R1	§ TRANSFOMER 220VA
4/b	ELE0000555R	§ TOROIDAL TRANSFORMER 230V
4/c	ELE0000575R1	§ TRANSFOMER 220VA 120/60 For version UL
5/a	TSIL05/08T-10	SILICON HOSE 5X8 MT.10
5/b	TSIL05/08T-50	SILICON HOSE 5X8 MT.50
6/a	TSIL07/11T-10	SILICON HOSE 7X11 MT.10
6/b	TSIL07/11T-50	SILICON HOSE 7X11 MT.50
7	Z0110001058	WATER INLET VALVE 24V DC
8/a	ELE0002310	MAINS SOCKET IEC 250V 15A For version UL
8/b	ELE0002312	MAINS SOCKET IEC 250V 10A
9	ELE0002014CL2	BIPOLAR SWITCH 15A 250V-ON/OFF
10	VIT0002009	SCREW ST HEAD CAP M3.5X6.5
11	GUA0000021	OR 130 NBR AL 75 BLACK
12	Z0100006001-01	F/F CYLINDRIC 3/4-3/8 REDUCT.
13		It is a part of the pos. 4
14/a	ELE0055008	SUPPLY CABLE+PLUG+SCHUK.SOCKET
14/b	ELE0055009	SUPPLY CABLE+PLUG+CH SOCKET
14/c	ELE0055010	SUPPLY CABLE+PLUG+GBSOCKET
14/d	ELE0055015	SUPPLY CABLE+PLUG 15A+SOCKET
14/e	ELE0055012	SUPPLY CABLE+PLUG+SCHUK.SOCKET
14/f	ELE0055013	SUPPLY CABLE+PLUG
14/g	ELE0055015	SUPPLY CABLE+PLUG 15A+SOCKET For version UL
15	GUA0011010	PLUG
16/a	ELE0003024	CERAMIC FUSE 6,3X32 12A
16/b	ELE0003029	FUSE 6.35X31.8 12A For version UL
17	ELE0003507	FUSE HOLDER 250V 16A
18	Z0010020839	INLET H2O VALVE PLUG

www.rheavendors.com tel: 0039 02 966 551 fax: 0039 02 96 55 086 email: rheavendors@rheavendors.com exclusive property of rheavendors group

external door

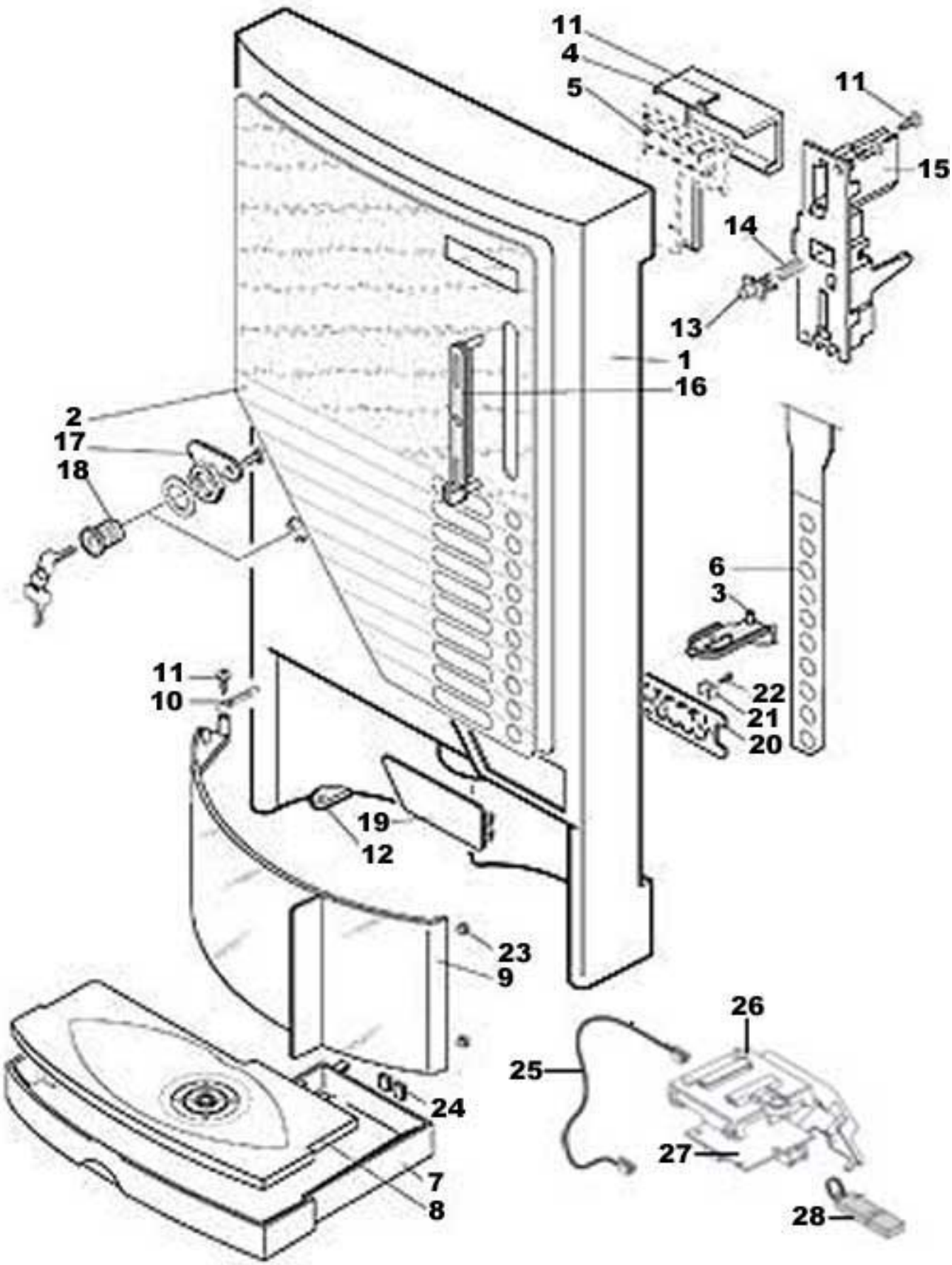

www.rheavendors.com tel: 0039 02 966 551 fax: 0039 02 96 55 086 email: rheavendors@rheavendors.com exclusive property of rheavendors group

external door		
Pos.	**Code**	**Description**
1/a	Z0020040204R	§ DOOR BLACK
1/b	Z0020040204R1	§ DOOR RAL9006
2		Please be so kind to specify the panel desired
3	Z0020040208	FLAP SUPPORT
4	Z0020040226	DISPLAY COVER
5		
6	Z0020040215	KEYPAD 10 BUTTON XM
7	Z0020040206	H2O DRIP TRAY
8	Z0020040207	H2O DRIP TRAY GRID
9	Z0020040210	FRONTAL FLAP
10	Z0380010431	SPRING
11	VIT0002469	SCREW HEAD TAP M3.5X10
12	Z0020040223	FLAP SUPPORT PIN
13	Z0020035033KB	COIN RETURN BUTTON
14	Z0020035034	COIN RETURN BUTTON SPRING
15	Z0020035032NA	PAYM SYSTEM SUPPORT
16	Z0020035031KB	COIN ENTRY PLATE
17	Z0020040212	LOCK HOOK
18	SER0000001/1	INOX LOCK C6802
19	Z0020040233	COIN RETURN SURROUND
20	Z0020040232	FIXING PLATE
21	4600010012	DRINK SELECTION PANEL BRACKET
22	VIT0002401	SCREW ST HEAD CAP M3.5X9.5
23	Z0020040235	FLAP PLUG
24	Z0020040213	DRIP TRAY SENSOR
25	ELT0030564	CPU PWR BOARD CONNEC CABL C125
26	Z0020040238	FLASH MEMORY CASING
27	SCH0006100	FLASH 2004 BOARD
28	Z0020040310CL/1	RHEA FLASH MEMORY

www.rheavendors.com tel: 0039 02 966 551 fax: 0039 02 96 55 086 email: rheavendors@rheavendors.com exclusive property of rheavendors group