vending machine

spare parts manual

www.rheavendors.com tel: 0039 02 966 551 fax: 0039 02 96 55 086 email: rheavendors@rheavendors.com exclusive property of rheavendors group

cabinet

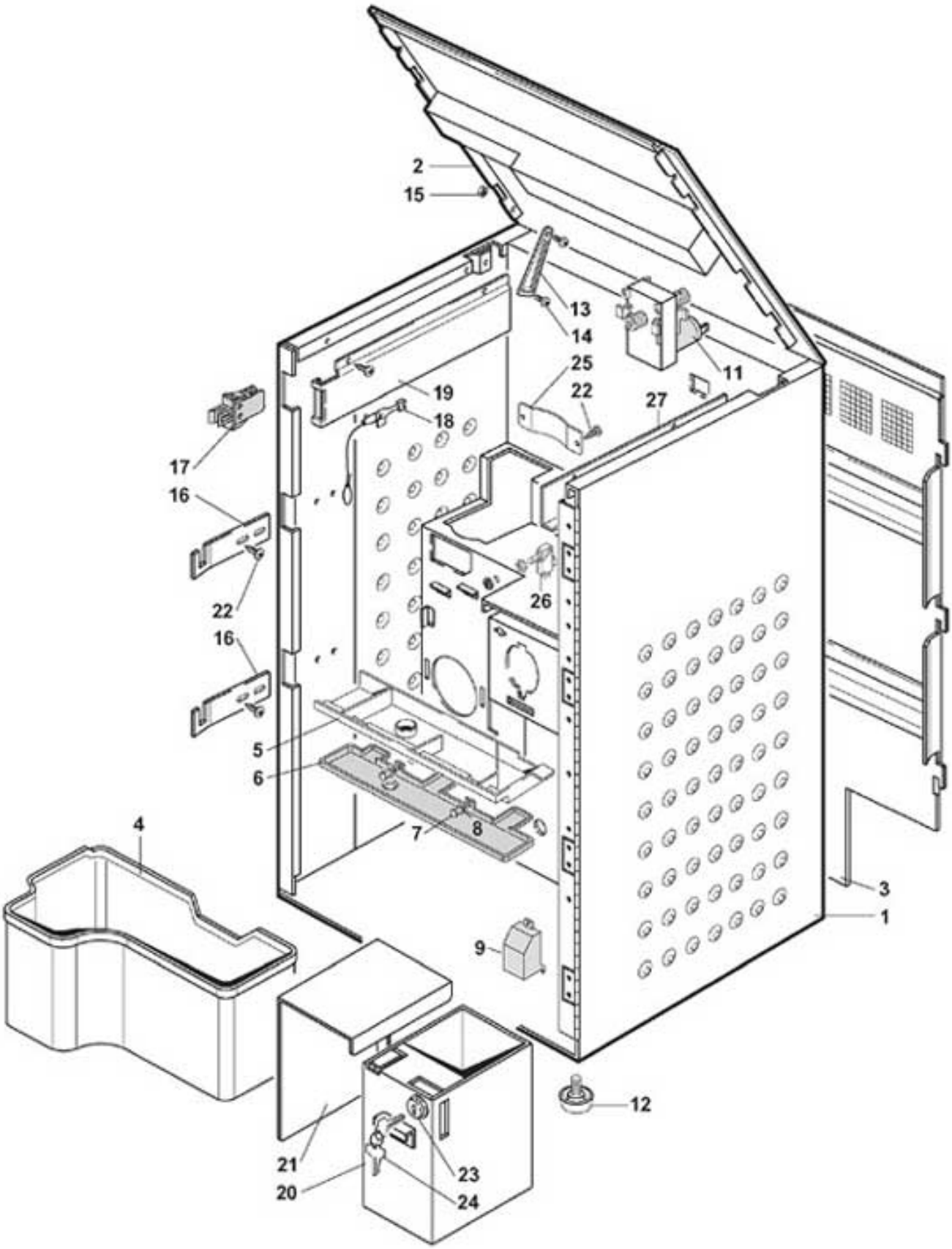

www.rheavendors.com tel: 0039 02 966 551 fax: 0039 02 96 55 086 email: rheavendors@rheavendors.com exclusive property of rheavendors group

cabinet		
Pos.	**Code**	**Description**
1/a	Z0010021005	CABINET
1/b	Z0010021105	CABINET
2/a	Z0010021021	UPPER COVER
2/b	Z0010021082	UPPER LID E
3	Z0010021022	REAR PANEL E
4	Z0010021026	GROUNDS TRAY
5	Z0010021061	TRAP DRAWER
6	Z0010021049	POWDER TRAY E
7	VIT0007107R	§ BUSH+BUTTON
8	VIT0007109	BENZING CLIP
9	Z0010022165R	§ DRIP TRAY SENSOR SUPPORT
10		
11	Z0090002113	MOTOR 24 DC 97 RPM
12	Z0010020169	MACHINE FOOT D.22X7 M.6X11
13/a		
13/b	VIT0010007	SHAFT
14/a	4060010126	PAYM SYSTEM FIXING SCREW
14/b	VIT0000106	SCREW COUNT FLAT HEAD M4X8
15	VIT0004503	NUT M4
16	Z0010021068	LOCK SHAFT HOOK
17	ELE0002009	BIPOLAR SWITCH 15A 250V
18	Z0270011109CL	§ SERVICE KEY
19/a	Z0270011556	DOOR SWTICH SUPPORT (Up to i
19/b	Z0270011557	DOOR SWITCH SUPPORT
20	Z0030006158	COIN BOX
21	Z0030006157	COIN BOX LID
22	VIT0000030	SCREW HEAD TAP CAP M4X7
23	SER0001005	LOCK PLATE
24	SER0000020	LOCK MM20 C.3425
25	Z0010021073	GRINDER CLOSING
26	ELE0001906	MICROSWITCH LEVER
27	Z0010021077	RIGHT WIRING SUPPORT

www.rheavendors.com tel: 0039 02 966 551 fax: 0039 02 96 55 086 email: rheavendors@rheavendors.com exclusive property of rheavendors group

cabinet

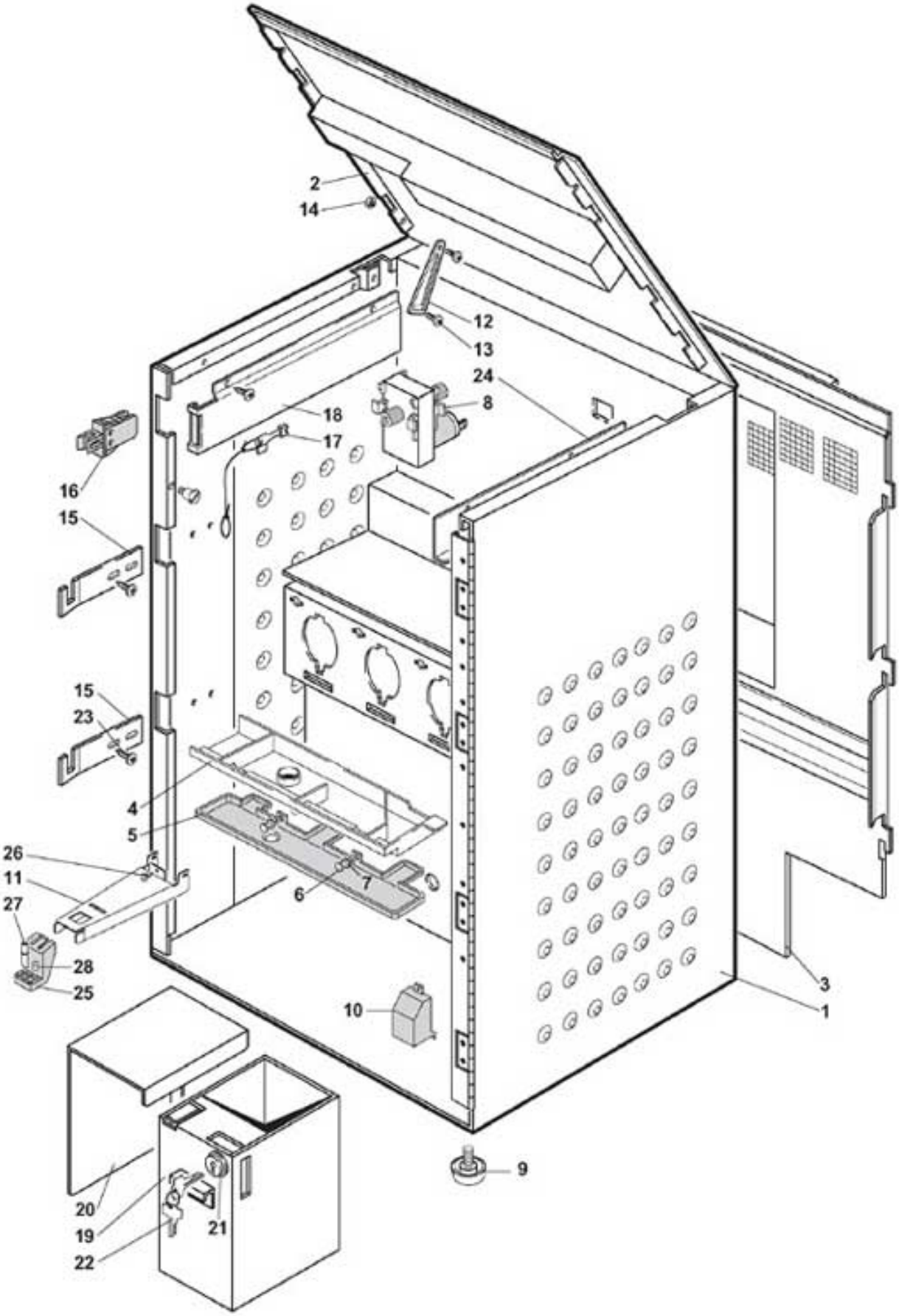

www.rheavendors.com tel: 0039 02 966 551 fax: 0039 02 96 55 086 email: rheavendors@rheavendors.com exclusive property of rheavendors group

cabinet		
Pos.	**Code**	**Description**
1	Z0010021055	CABINET
2/a	Z0010021062	UPPER COVER
2/b	Z0010021085	UPPER LID I
3	Z0010021064	REAR PANEL I
4	Z0010021061	TRAP DRAWER
5	Z0010021047	POWDER TRAY I
6	VIT0007107R	§ BUSH+BUTTON
7	VIT0007107R	§ BUSH+BUTTON
8	Z0090002113	MOTOR 24 DC 97 RPM
9	Z0010020169	MACHINE FOOT D.22X7 M.6X11
10	Z0010022165R	§ DRIP TRAY SENSOR SUPPORT
11	Z0380011228	NOZZLE HOLDER BRACKET
12/a		
12/b	VIT0010007	SHAFT
13/a	4060010126	PAYM SYSTEM FIXING SCREW
13/b	VIT0000106	SCREW COUNT FLAT HEAD M4X8
14	VIT0004503	NUT M4
15	Z0010021068	LOCK SHAFT HOOK
16	ELE0002009	BIPOLAR SWITCH 15A 250V
17	Z0270011109CL	§ SERVICE KEY
18/a	Z0270011556	DOOR SWTICH SUPPORT (Up to i
18/b	Z0270011557	DOOR SWITCH SUPPORT
19	Z0030006158	COIN BOX
20	Z0030006157	COIN BOX LID
21	SER0001005	LOCK PLATE
22	SER0000020	LOCK MM20 C.3425
23	VIT0000030	SCREW HEAD TAP CAP M4X7
24	Z0010021077	RIGHT WIRING SUPPORT
25	Z0380010655NA/L	NOZZLES HOLDER
26	VIT0000030	SCREW HEAD TAP CAP M4X7
27	Z0380010657NA	ESPRESSO NOZZLE D. 5,7
28	Z0380010656NA	PLUG BLACK

www.rheavendors.com tel: 0039 02 966 551 fax: 0039 02 96 55 086 email: rheavendors@rheavendors.com exclusive property of rheavendors group

rear cabinet

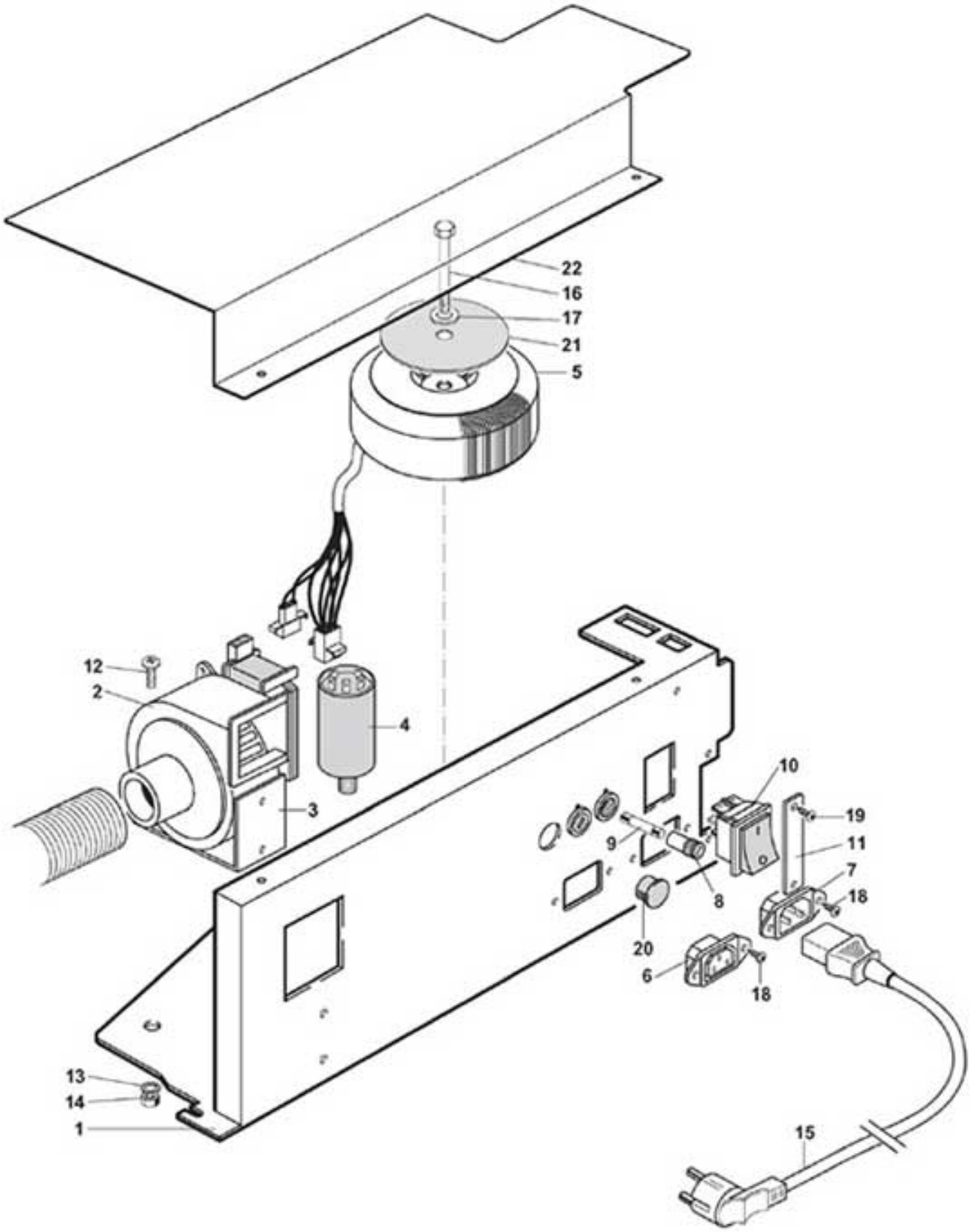

www.rheavendors.com tel: 0039 02 966 551 fax: 0039 02 96 55 086 email: rheavendors@rheavendors.com exclusive property of rheavendors group

rear cabinet		
Pos.	**Code**	**Description**
1	Z0010021016	ELECTRIC COMPONENTS SUPPORT
2	ELE0000459	TRAP 26/50 D. 55
3	Z0010020145	TRAP SUPPORT
4	ELE0009055	NOISE FILTER 16A
5	ELE0000565R	TRANSFORMER
6	ELE0002312	MAINS SOCKET IEC 250V 10A
7	ELE0002310	MAINS SOCKET IEC 250V 15A
8	ELE0003507	FUSE HOLDER 250V 16A
9	ELE0003024	CERAMIC FUSE 6,3X32 12A
10	ELE0002014	BIPOLAR SWITCH 15A 250V
11	Z0010021071	PLUG FOR CONNECTOR
12	VIT0000013	SCREW HEAD TAP CAP M4X12
13	VIT0003103	SPRING WASHER 4,3
14	VIT0004503	NUT M4
15/a	ELE0055008	SUPPLY CABLE+PLUG+SCHUK.SOCKET
15/b	ELE0055009	SUPPLY CABLE+PLUG+CH SOCKET
15/c	ELE0055010	SUPPLY CABLE+PLUG+GBSOCKET
15/d	ELE0055013	SUPPLY CABLE+PLUG
16	VIT0000239	M 6*50 H.H. SCREW
17	VIT0003005	WASHER 6,4X12X1,6
18	VIT0002009	SCREW ST HEAD CAP M3.5X6.5
19	VIT0000002	SCREW HEAD TAP CAP M3X6
20	GUA0011010	PLUG
21		It is a part of the pos. 5
22	Z0010021074	ELECTRICAL COMPONENTS COVER
100	Z0010021024CL	ELECTRIC COMPONENTS SUPPORT AS

www.rheavendors.com tel: 0039 02 966 551 fax: 0039 02 96 55 086 email: rheavendors@rheavendors.com exclusive property of rheavendors group

external door

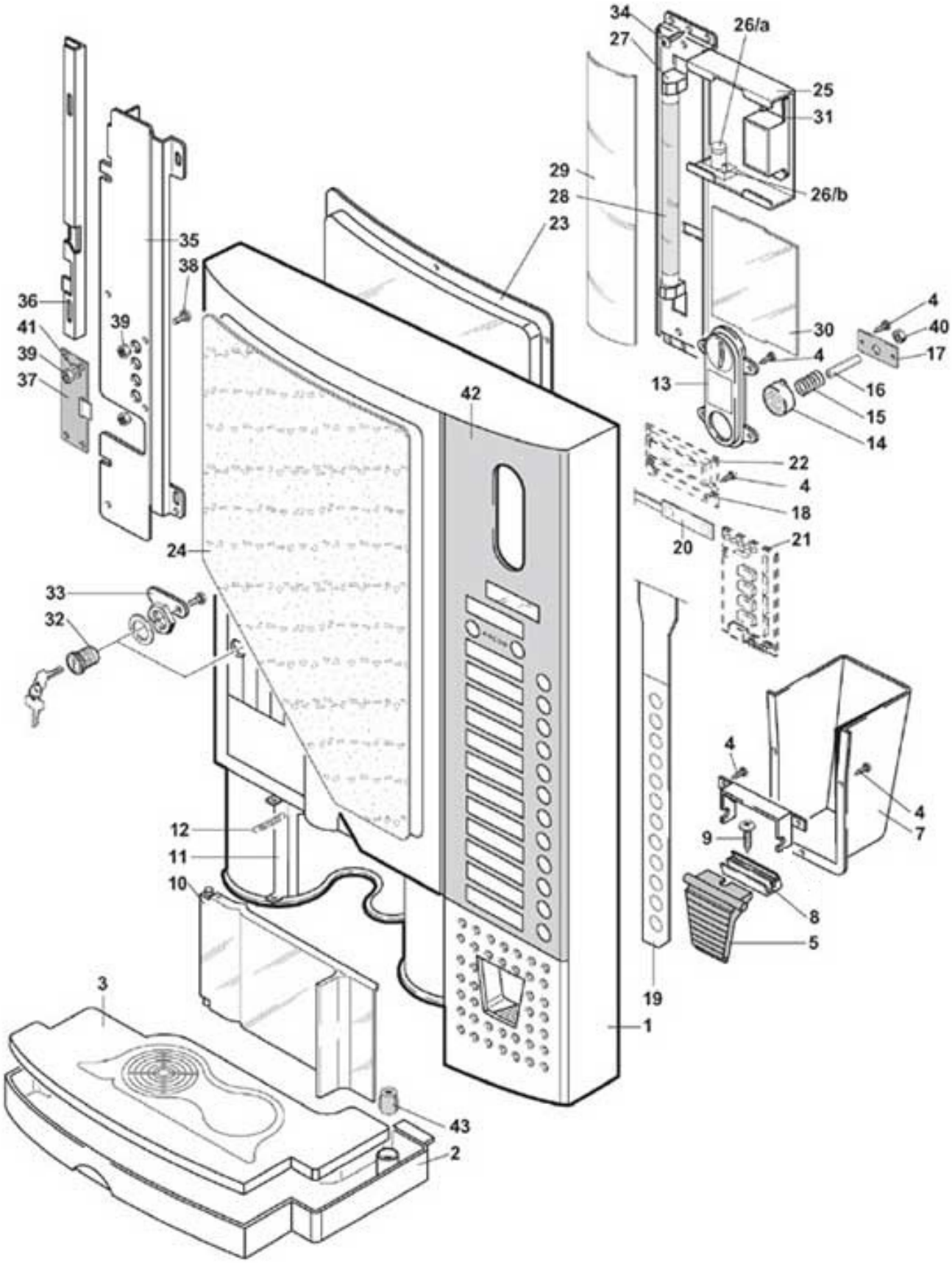

www.rheavendors.com tel: 0039 02 966 551 fax: 0039 02 96 55 086 email: rheavendors@rheavendors.com exclusive property of rheavendors group

external door		
Pos.	**Code**	**Description**
1	Z0020040005R1	§ DOOR RAL9006
2	Z0400008615	DRIP TRAY
3	Z0400008616	DRIP TRAY GRID
4	VIT0002469	SCREW HEAD TAP M3.5X10
5/a	Z0020027012CM	COIN RETURN FLAP RAL 9006
5/b	Z0020027012NA	COIN RETURN FLAP RAL 9005
7	Z0020040010	COIN RETURN TRAY
8	Z0020027052	COUNTERWEIGHT COIN FLAP
9	VIT0002401	SCREW ST HEAD CAP M3.5X9.5
10	Z0020040041	FRONTAL FLAP
11	Z0020040033	FLAP SUPPORT
12	Z0020040062	SPRING
13	Z0020027025NA	COIN ENTRY PLATE RAL 9005
14	Z0020027026NA	COIN RETURN BUTTON RAL 9005
15	Z0020018077	COIN RETURN SPRING
16	Z0020040026	PIN
17	Z0020040025	PLATE
18	Z0020040045	DISPLAY PLATE SUPPORT
19	Z0020040006	KEYPAD 12 BUTTON
20	Z0020040051	KEYPAD 2 SUGAR BUTTON
21		See table control and power logic
22		See table control and power logic
23	Z0020040039	PLEXIGLASS GRAPHIC PANEL
24/a	Z0020040081	GRAPHIC PANEL CAPPUCCINO XL
24/b	Z0020040082	GRAPHIC PANEL NERO CAFE XL
25	Z0180012158	LAMP/BALLAST SUPPORT
26/a	ELE0009108	BALLAST HOLDER
26/b	ELE0009109	BALLAST 4/65W
27	ELE0009107	NEON LAMP HOLDER
28	ELE0009018	LAMP F8W-CW-T5
29	Z0020040009	LAMP COVER
30	Z0020040008	BALLAST PROTECTION
31	ELE0009116	BALLAST 220V 0,17A
32	SER0000001/1	INOX LOCK C6802
33	SER0001005	LOCK PLATE
34	VIT0000030	SCREW HEAD TAP CAP M4X7
35	Z0180012133	BRACKET
36	Z0020040075	DOOR BLOCK SHAFT
37		See table control and power logic
38	Z0020040076	SCREW
39	VIT0004503	NUT M4
40	VIT0007013	NUT WINGS M4
41	VIT0003103	SPRING WASHER 4,3
42	Z0020040066	KEYPAD PANEL BLACK
43	Z0400008627R	§ WASTE FLOAT
100	Z0020040012	CABLED LAMP/ BALLAST SUPPORT

www.rheavendors.com tel: 0039 02 966 551 fax: 0039 02 96 55 086 email: rheavendors@rheavendors.com exclusive property of rheavendors group

cups loader

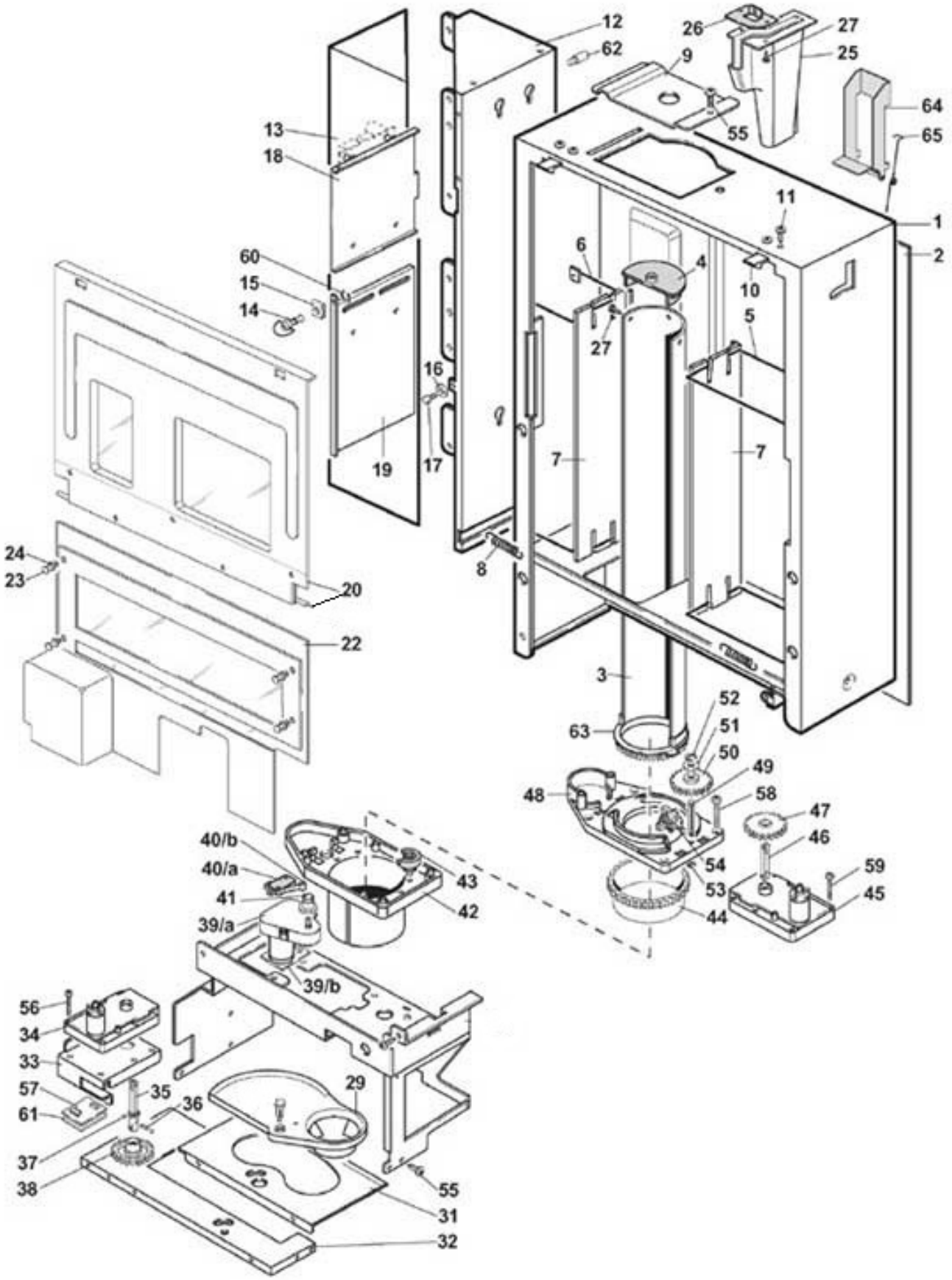

www.rheavendors.com tel: 0039 02 966 551 fax: 0039 02 96 55 086 email: rheavendors@rheavendors.com exclusive property of rheavendors group

cups loader		
Pos.	**Code**	**Description**
1	Z0180012105	XL CUPS LOADER STRUCTURE
2	Z0180012112	FRONT SPACER AND COVERING
3	Z0180012108	CENTRAL COLUMN
4	Z0180005007	CENTRAL COLUMN GUIDE
5	Z0180012153	PUSH WALL BRACKET-LONG
6	Z0180012154	PUSH WALL BRACKET-SHORT
7	Z0180005009	SHORT CUPS DISPENSER WALL
8	Z0180005011	SPRING
9	Z0180012113	COLUMN MOUNTING PLATE
10	Z0180012116	COVER HOOK
11	VIT0007021	BLIND RIVET 3X6
12	Z0180012121	COIN BOX CUPS LOADER SUPPORT
13	Z0180012136	PAYM SYSTEM COVER
14	VIT0009163	RING
15	VIT0009155	BUSH
16	Z0180012156	SPACER
17	Z0180012157	SCREW
18	Z0180012151	CPU SUPPORT PLATE
19	Z0180012127	PAYM SYSTEM SUPPORT
20	Z0180012120R	COMPLETE MOBILE COVER
22	Z0180012118	COVER
23	VIT0007104R	§ BUSH+BUTTON
24	VIT0007104R	§ BUSH+BUTTON
25	Z0180012147	COIN CHUTE
26	Z0180012161	FIXING PLATE
27	VIT0002401	SCREW ST HEAD CAP M3.5X9.5
29	Z0400008606R	§ CUP SUPPORT
31	Z0400008610	CUP MOVEMENT FRAME
32	Z0180012141	PIPE MOUVEMENT SUPPORT
33	Z0400008625	CUP MOUVEMENT MOTOR SUPPORT
34	Z0090002109	GEAR MOTOR 24 RPM 24V DC
35	Z0400008620	CONNECTOR
36	Z0400008626	CUP MOVEMENT SPRING
37	VIT0009306	CAM SPHERE
38	Z0400008619	GEAR Z25
39/a	Z0090002512	GEAR MOTOR 11RPM 24V DC
39/b	SCH0003740	MOTOR FILTER
40/a	ELE0001522	MICROSWITCH
40/b	ELE0001906	MICROSWITCH LEVER
41	Z0190006007	PINION
42	Z0190012155CL	§ CUPS DISPENSER MECH.
43	Z0190006005	CAM
44	Z0190006004	TOOTHED RING NUT
45	Z0090002114	GEAR MOTOR 11 RPM 24V DC
46	Z0380010421	GEARBOX MOTOR SHAFT
47	Z0180011544	PINION Z 30
48	Z0190012155CL	§ CUPS DISPENSER MECH.

www.rheavendors.com tel: 0039 02 966 551 fax: 0039 02 96 55 086 email: rheavendors@rheavendors.com exclusive property of rheavendors group

cups loader		
49	Z0180011533	SHAFT
50	Z0190012108	PINION Z 30
51	VIT0003303	WASHER 6,6X18X1,5
52	VIT0006503	RING 4
53	VIT0006502	RING 3.2
54	SCH0004220	CUPS SENSOR/COLUMN BOARD
55	VIT0000030	SCREW HEAD TAP CAP M4X7
56	VIT0002001	SCREW ST HEAD CAP M2.9X6.5
57	SCH0004000	XL MAGNETIC DETECTORS
58	VIT0000019	SCREW HEAD TAP CAP M5X35
59	VIT0000015	SCREW HEAD TAP CAP M4X25
60	VIT0006504	RING 5
61	Z0400008634	ISOLATION
62	Z0180012159	DOOR CONTRAST SPACER
63	Z0180011762	TOOTHED RING NUT
64	Z0020040027	COIN RETURN LEVER
65	Z0030010081	REJECT COINS SPRING
100	Z0400008625R	§ MOTOR HOLDER
101	Z0180012100CL	§ CUPS DISPENSER

www.rheavendors.com tel: 0039 02 966 551 fax: 0039 02 96 55 086 email: rheavendors@rheavendors.com exclusive property of rheavendors group

stirrer dispenser

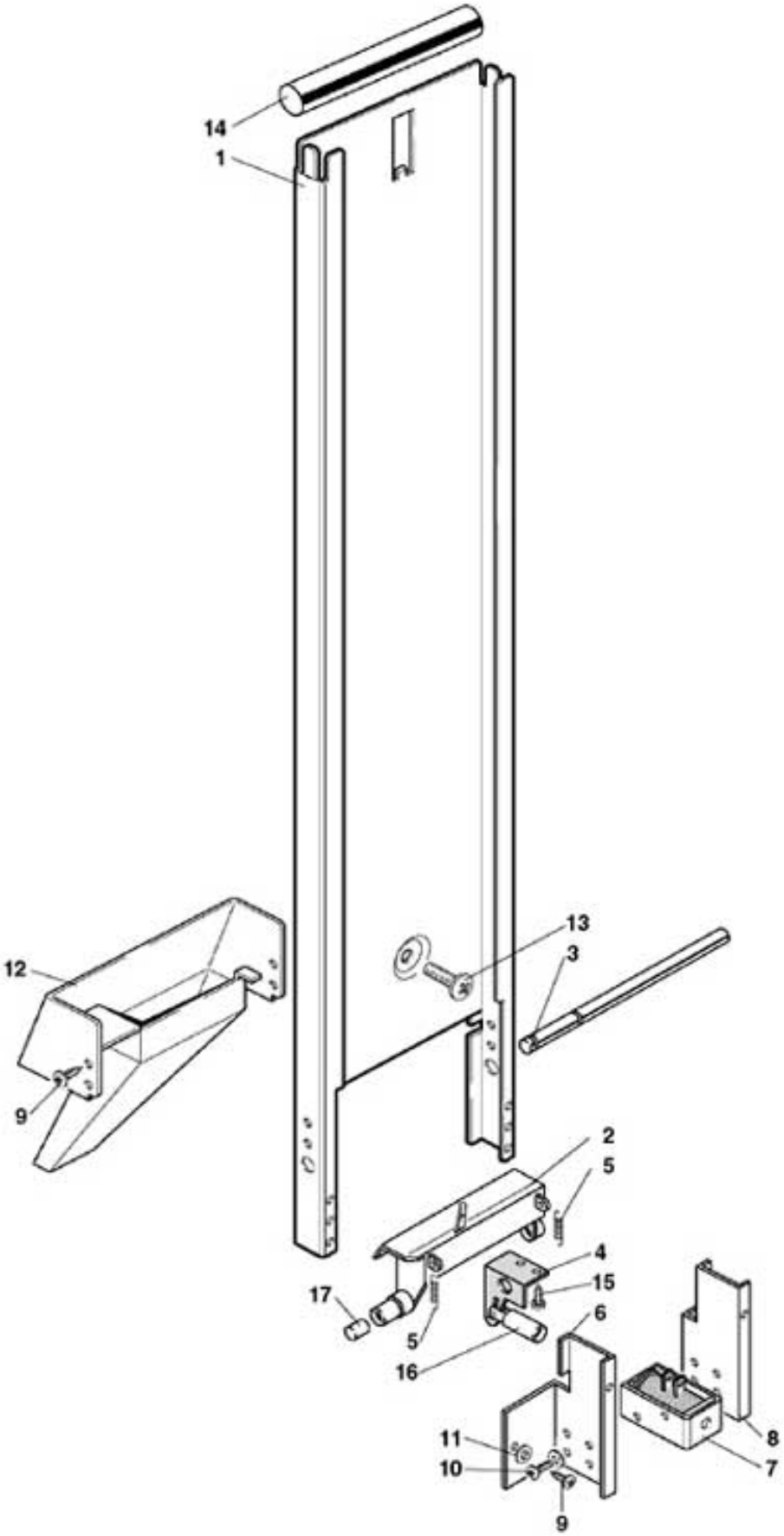

www.rheavendors.com tel: 0039 02 966 551 fax: 0039 02 96 55 086 email: rheavendors@rheavendors.com exclusive property of rheavendors group

stirrer dispenser		
Pos.	**Code**	**Description**
1/a	Z0450003136	STICKS CONTAINER mm 89
1/b	Z0450003141	STICKS CONTAINER mm 104
2	Z0450002003	STIRRER EJECTOR
3/a	Z0450003008	STICKS DISPENSER PIN 89 mm
3/b	Z0450003032	STIRRER EJECTOR PIN
4	Z0450003007	ELECTROMAGNET CONNECTING ROD
5	Z0450003010	SPRING
6	Z0450003002	RIGHT SUPPORT
7	ELE0000055	ELECTROMAGNET 5% 24V DC
8	Z0450003003	LEFT SUPPORT
9	VIT0002401	SCREW ST HEAD CAP M3.5X9.5
10	VIT0000021	SCREW HEAD TAP CAP M4X6
11	VIT0003454	SPRING WASHER 4,2
12/a	Z0450003137	STICKERS CHUTE 89
12/b	Z0450003142	STICKERS CHUTE 104
13	4060010126	PAYM SYSTEM FIXING SCREW
14/a	4001012030	STIRRER WEIGHT 89MM
14/b	Z0450003033	STIRRER WEIGHT 104MM
15	VIT0002469	SCREW HEAD TAP M3.5X10
16	VIT0005211	DOWEL PIN 2.5X12
17	Z0450003031	SPACER
100	Z0450003130CL	§ STIRRER DISPENSER 89 Except pos. 14
101	Z0450003140CL	§ STIRRER DISPENSER 104 Except pos. 14

www.rheavendors.com tel: 0039 02 966 551 fax: 0039 02 96 55 086 email: rheavendors@rheavendors.com exclusive property of rheavendors group

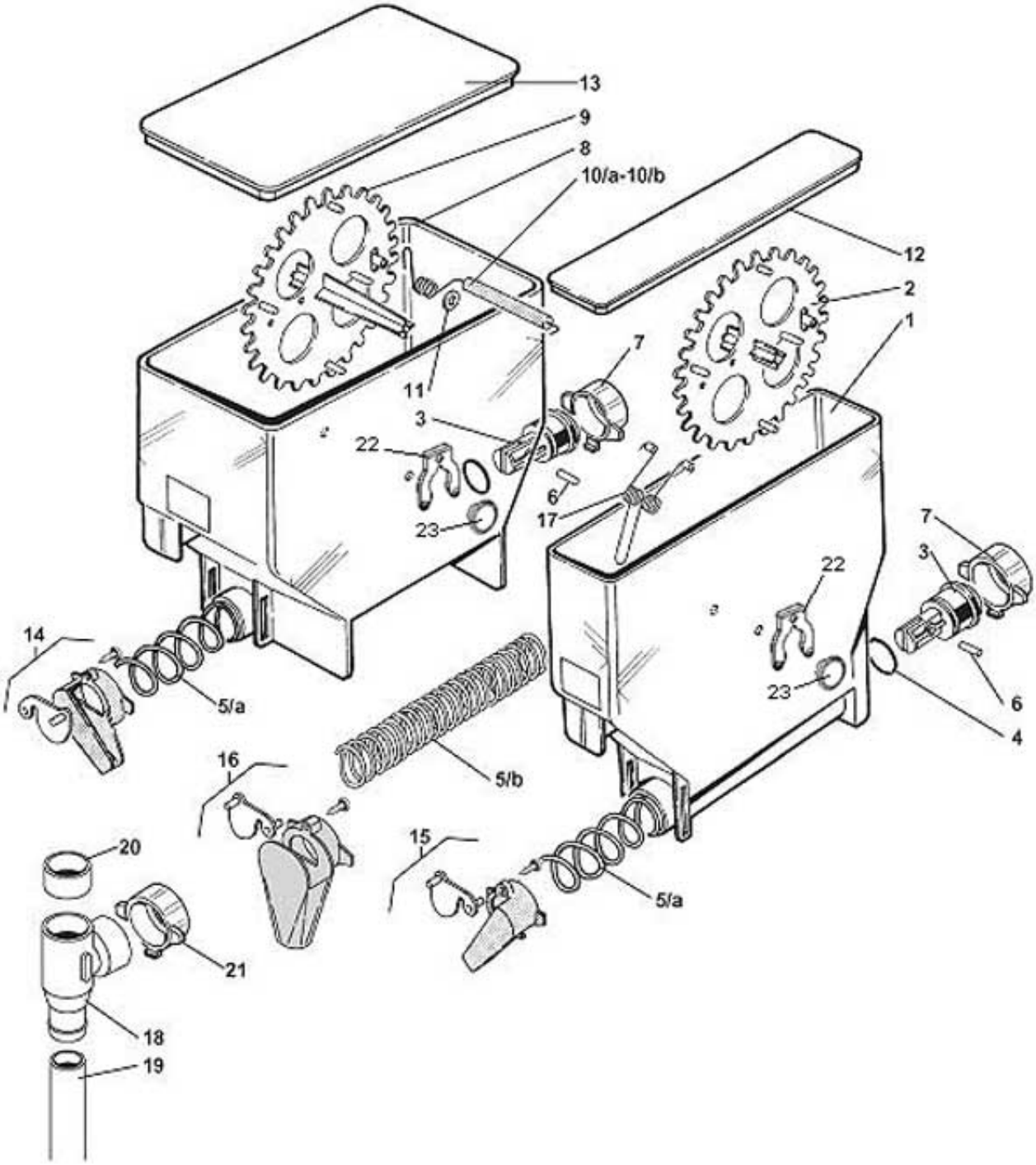

www.rheavendors.com tel: 0039 02 966 551 fax: 0039 02 96 55 086 email: rheavendors@rheavendors.com exclusive property of rheavendors group

products container		
Pos.	**Code**	**Description**
1	Z0230030233	INGREDIENT CANISTER 54 190
2	Z0230030236AB	§ WHEEL MM54
3	Z0230030012	SPIRAL PIN
4	GUA0000083	OR 123 RED SILICONE A70
5/a	Z0230030014	SPIRAL 18
5/b	Z0230030013	SPIRAL 9
6	VIT0005106	PIN 2X14
7	Z0230030011	REAR BUSH
8	Z0230030234	§ CANISTER 110-265 W/PIN
9	Z0230030237AB	§ WHEEL MM110
10/a	Z0230030064	AGITATOR 112 - RIGHT OUTLET
10/b	Z0230030062	AGITATOR 112 - LEFT OUTLET
11	VIT0003210	WASHER 8,4X16X1,6
12	Z0230030006	CANISTER 55 LID
13	Z0230030009	CANISTER 112 LID
14/a	Z0230030058R	§ INGRED. CHUTE-RIGHT ORANGE
14/b	Z0230030044R	§ INGREDIENT CHUTE-RIGHT RED
15/a	Z0230030057R	§ INGREDIENT CHUTE-LEFT ORANGE
15/b	Z0230030043R	§ INGREDIENT CHUTE-LEFT RED
16/a	Z0230030059R	§ INGRED. CHUTE-FRONTALORANGE
16/b	Z0230030055R	§ INGREDIENT CHUTE-FRONTAL RED
17	Z0230030060-05	MIXER
18	Z0230016024	SUGAR CHUTE
19/a	TSIL15/19T-10	SILICON HOSE 15X19 MT.10
20	4002050109AD	INGREDIENT CHUTE PLUG
21	Z0230030206	SUGAR CHUTE REDUCTION
22	Z0230030239	WHEEL PIN FORK
23	Z0230030238-02	WHEEL PIN
100	Z0230030013CL	§ SPIRAL 9
101	Z0230030014CL	§ SPIRAL 18
102	Z0230030250R	§ CANIS. 54-265 WHEEL18 W/LID
103	Z0230030251R	§ CANIS. 54-265 WHEEL9 W/LID
104	Z0230030252R	§ CANIS. 54-265 AGIT.18 W/LID
105	Z0230030253R	§ CANIS. 54-265 AGIT.9 W/LID
106	Z0230030260R	§ CAN. 110-265 AGIT.18 W/LID-R
107	Z0230030261R	§ CAN. 110-265 AGIT.9 W/LID-R
108	Z0230030262R	§ CAN. 110-265 AGIT.18 W/LID-L
109	Z0230030263R	§ CAN. 110-265 AGIT.9 W/LID-L
110	Z0230030264R	§ CAN. 110-265 SPIRAL9 W/LID-R

www.rheavendors.com tel: 0039 02 966 551 fax: 0039 02 96 55 086 email: rheavendors@rheavendors.com exclusive property of rheavendors group

mixers

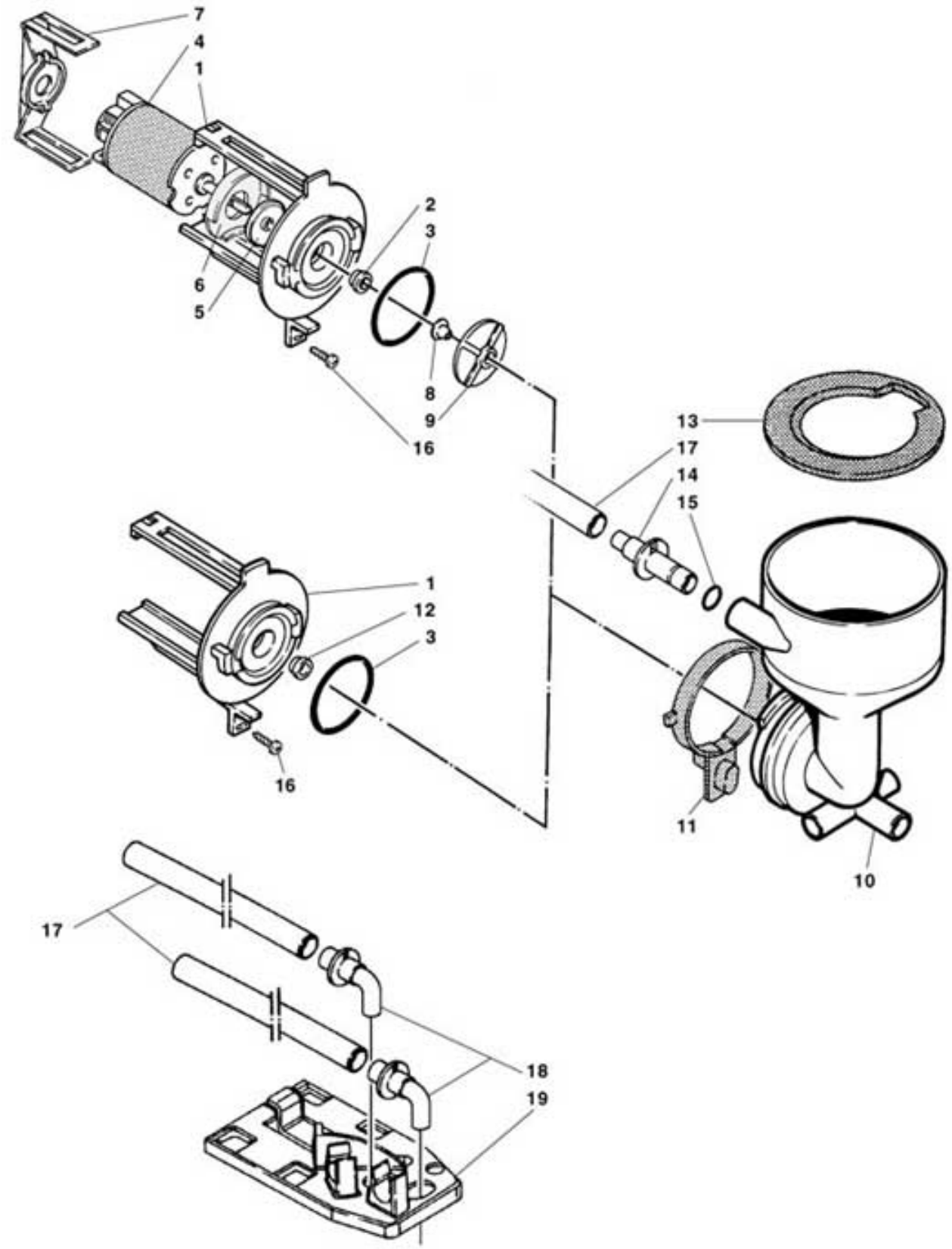

www.rheavendors.com tel: 0039 02 966 551 fax: 0039 02 96 55 086 email: rheavendors@rheavendors.com exclusive property of rheavendors group

mixers		
Pos.	**Code**	**Description**
1	Z0080100005	MOTOR MIXER BASE
2	Z0080100015	MIXER BUSH
3	GUA0000084	OR 3131 RED SILICONE A60
4	Z0090003023	MIXER MOTOR 24V DC SHAFT D.4
5	Z0080100024	MIXER FAN
6	Z0080100023IC	MIXER COVER RAL2011
7	Z0080100009IC	MIXER MOTOR SUPPORT RAL2011
8	Z0080100102	MIXER SHAFT GASKET
9	Z0080100011	MIXER FAN
10/a	Z0080200101L	MIXING BOWL L.W/H20 BREAKER
10/b	Z0080200102R	MIXING BOWL R.W/H20 BREAKER
10/c	Z0080200103C	MIXING BOWL F.W/H20 BREAKER
11	Z0080100006IC	LOCK RING RAL2011
12	Z0080100018	MIXER PLUG
13	Z0080100008	UPPER RING
14	Z0080100013	MIXER CONNECTOR
15	GUA0000085	OR 106 RED SILICONE A70
16	VIT0002401	SCREW ST HEAD CAP M3.5X9.5
17	TSIL06/09T	SILICON HOSE 6X9
100	Z0080100001R	§ MIXER BOWL BASE+MOTOR
18	Z0010020052	PRODUCT NOZZLE
19	Z0010020409	NOZZLE HOLDER

www.rheavendors.com tel: 0039 02 966 551 fax: 0039 02 96 55 086 email: rheavendors@rheavendors.com exclusive property of rheavendors group

extractable sugar movement

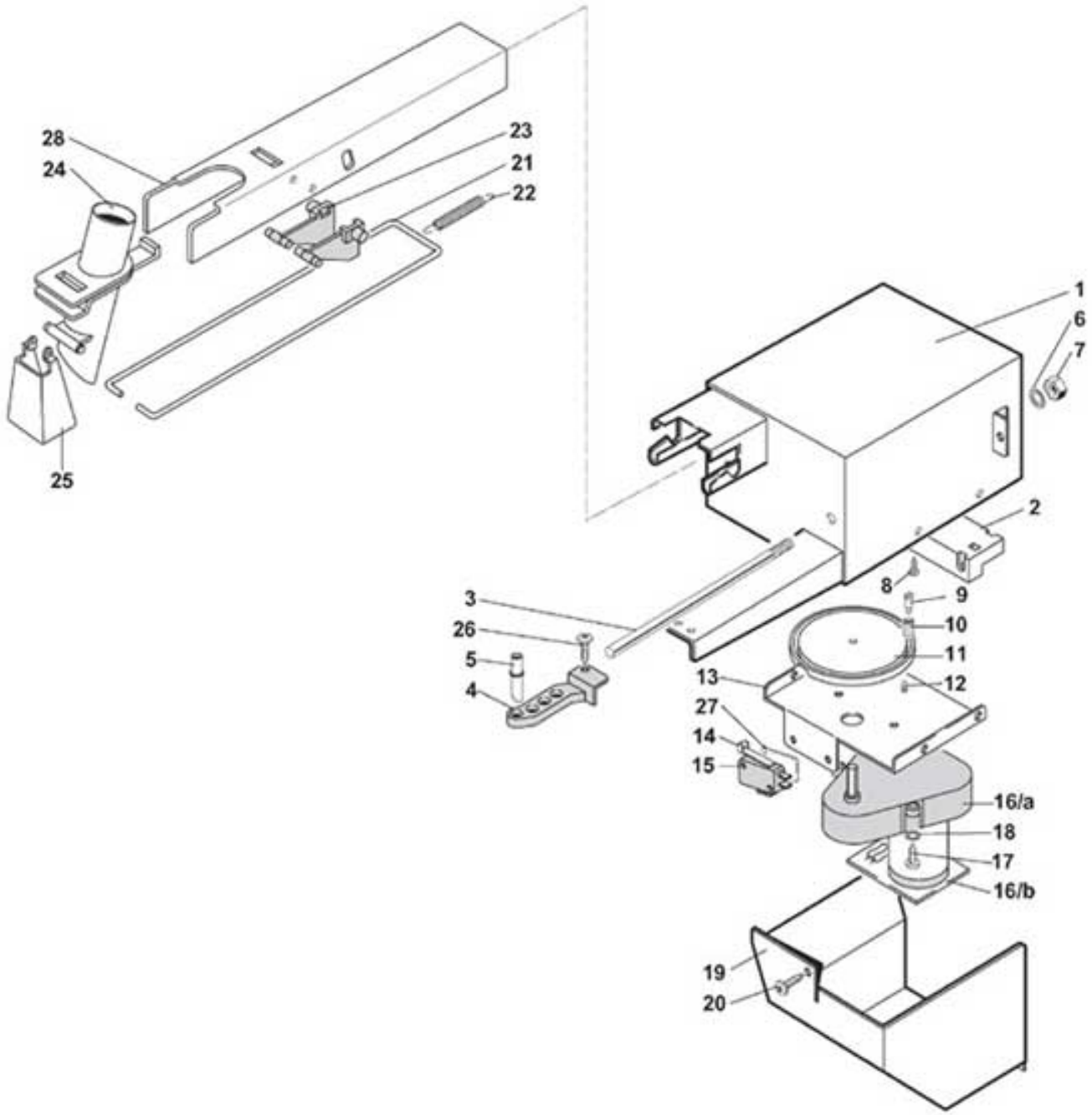

www.rheavendors.com tel: 0039 02 966 551 fax: 0039 02 96 55 086 email: rheavendors@rheavendors.com exclusive property of rheavendors group

extractable sugar movement		
Pos.	**Code**	**Description**
1	Z0380011314	PIPES SUPPORT HOUSING
2	Z0380011321	PIPE SUPPORT GUIDE
3	Z0380011322	SHAFT
4	Z0380011231	NOZZLE HOLDER
5	Z0380010657NA	ESPRESSO NOZZLE D. 5,7
6	VIT0003103	SPRING WASHER 4,3
7	VIT0004503	NUT M4
8	VIT0002401	SCREW ST HEAD CAP M3.5X9.5
9	Z0200001012	PIN BEARING
10	Z0200001011	BEARING
11	Z0380011326R	ROD
12	VIT0007002	SET SCREW 4X6
13	Z0380011311	GEAR MOTOR SUPPORT
14	ELE0001906	MICROSWITCH LEVER
15	ELE0001522	MICROSWITCH
16/a	Z0090002512	GEAR MOTOR 11RPM 24V DC
16/b	SCH0003740	MOTOR FILTER
17	VIT0000003	SCREW HEAD TAP CAP M3X8
18	VIT0003102	SPRING WASHER 3,2
19	Z0380011312	GEAR MOTOR COVER
20	VIT0002002	SCREW ST HEAD CAP M3.5X6.5
21	Z0380011319	BRACKET
22	Z0380010431	SPRING
23	Z0380010599	NOZZLE MOVEMENT BUTTON
24	Z0380011229NA	SUGAR CHUTE
25	Z0380010424NA	SUGAR SPLITTER
26	VIT0000030	SCREW HEAD TAP CAP M4X7
27	7500902054	ISOLATION
28	Z0380011318	SUPPORT
100	Z0380011231CL	§ SUGAR DISPENSER

www.rheavendors.com tel: 0039 02 966 551 fax: 0039 02 96 55 086 email: rheavendors@rheavendors.com exclusive property of rheavendors group

container batcher grinder group

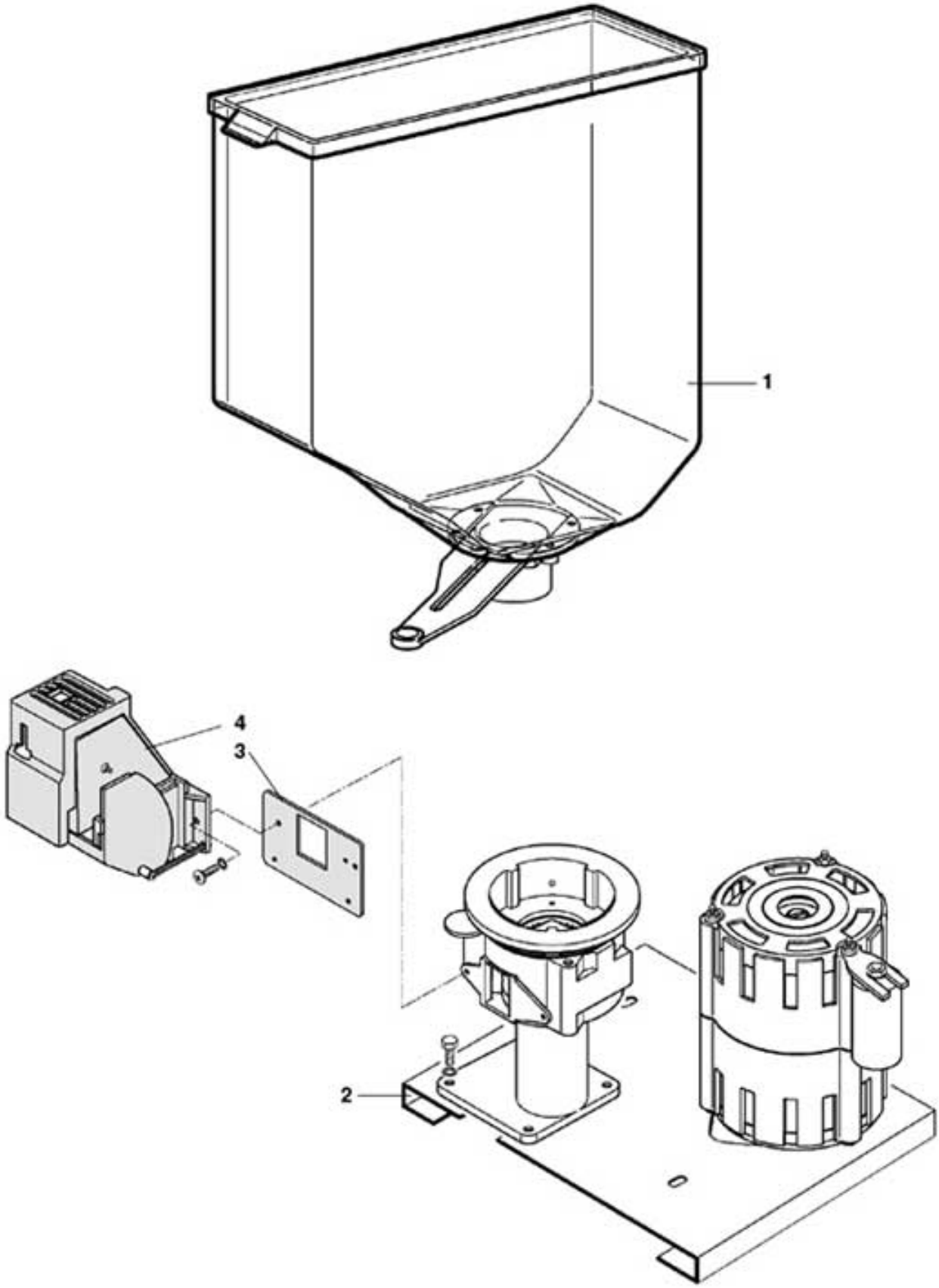

www.rheavendors.com tel: 0039 02 966 551 fax: 0039 02 96 55 086 email: rheavendors@rheavendors.com exclusive property of rheavendors group

container batcher grinder group		
Pos.	**Code**	**Description**
1		See table coffee beans container group
2		See table grinder- batcher + engine
3	Z0320004214	DOSER SPACER
4		See table PL batcher group with 24 v dc setting

www.rheavendors.com tel: 0039 02 966 551 fax: 0039 02 96 55 086 email: rheavendors@rheavendors.com exclusive property of rheavendors group

coffee beans container group

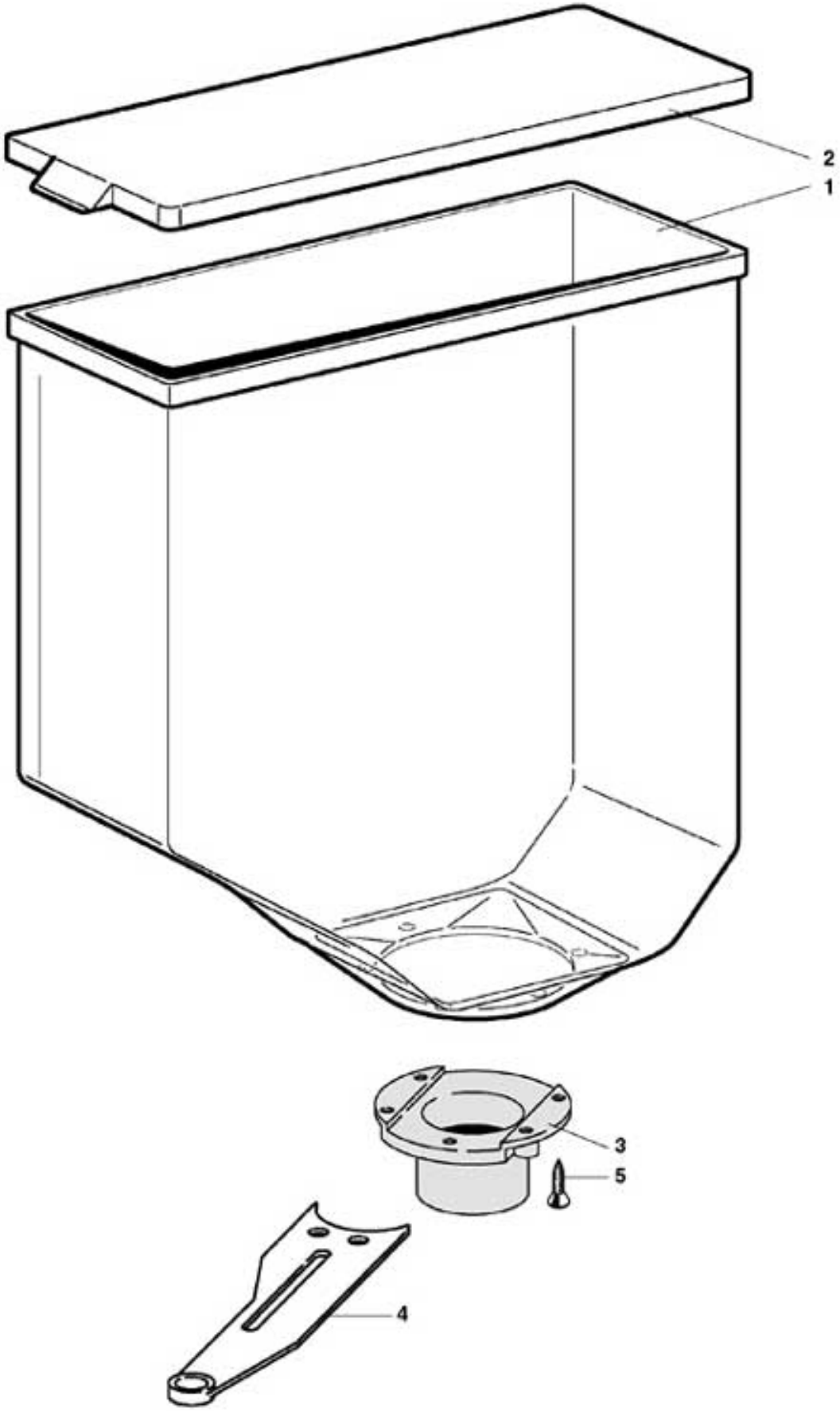

www.rheavendors.com tel: 0039 02 966 551 fax: 0039 02 96 55 086 email: rheavendors@rheavendors.com exclusive property of rheavendors group

coffee beans container group		
Pos.	**Code**	**Description**
1	Z0230015161	COFFEE BEANS HOPPER
2	Z0230015162	COFFEE BEANS HOPPER LID
3	Z0230015035	COFFEE BEANS HOPPER STOPPER
4	Z0230015207IC	COFFEE BEANS HOPPER STOPPER
5	VIT0002104	SCREW COUNT FLAT HEAD M3.9X16
100	Z0230015160CL	COFFEE BEANS CONTAINER

www.rheavendors.com tel: 0039 02 966 551 fax: 0039 02 96 55 086 email: rheavendors@rheavendors.com exclusive property of rheavendors group

GRUPPO MACININO VERTICALE SENZA PULEGGIA

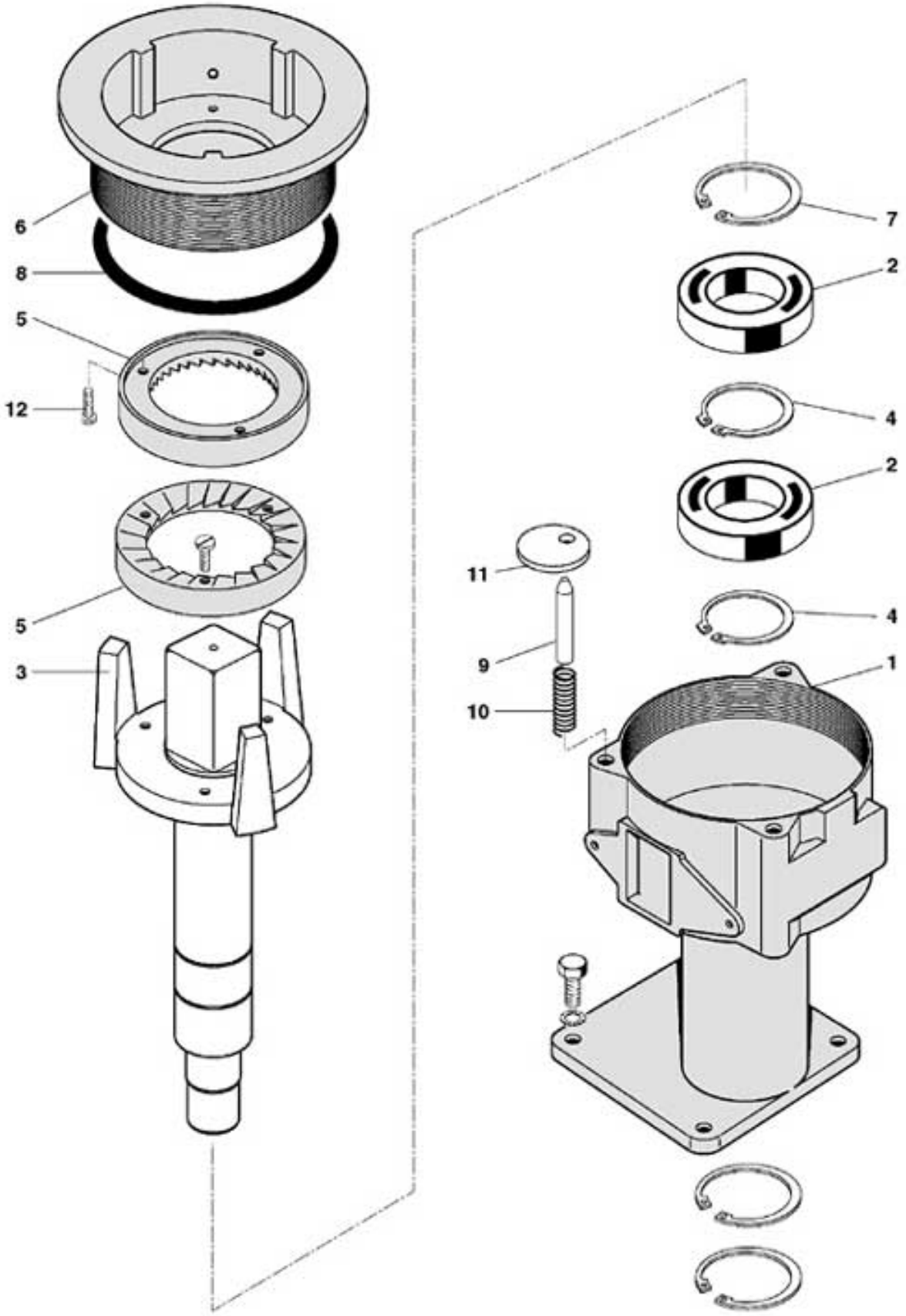

www.rheavendors.com tel: 0039 02 966 551 fax: 0039 02 96 55 086 email: rheavendors@rheavendors.com exclusive property of rheavendors group

GRUPPO MACININO VERTICALE SENZA PULEGGIA		
Pos.	**Code**	**Description**
1	Z0320004006	GRINDER BODY
2	VIT0009301	BEARING
3	Z0320004609	LOWER GRINDER SUPPORT
4	VIT0006651	RING
5	Z0320004091	GRINDER RING D.63.4 24
6	Z0320002004	UPPER GRINDER SUPPORT
7	VIT0006602	RING
8	GUA0000090	OR 3268
9	Z0320002011	PIN
10	270001023	SPRING
11	Z0320002010	PLATE
12	VIT0000024	SCREW HEAD FLAP CAP M4X8
100	Z0320004020CL	§ GRINDER

www.rheavendors.com tel: 0039 02 966 551 fax: 0039 02 96 55 086 email: rheavendors@rheavendors.com exclusive property of rheavendors group

PL batcher group with 24 v dc setting

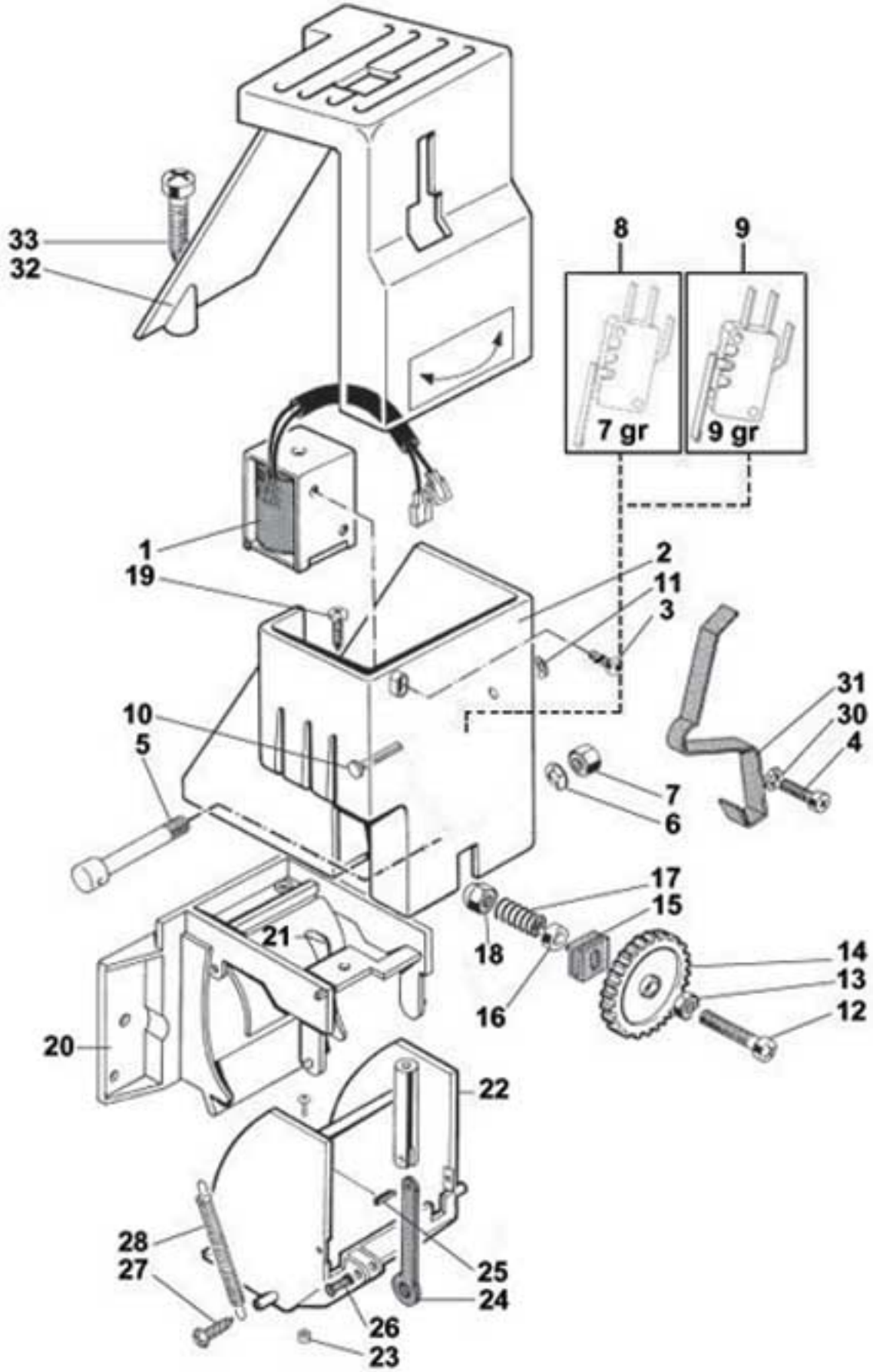

www.rheavendors.com tel: 0039 02 966 551 fax: 0039 02 96 55 086 email: rheavendors@rheavendors.com exclusive property of rheavendors group

PL batcher group with 24 v dc setting		
Pos.	**Code**	**Description**
1	ELE0000056R	ELECTROMAGNET 24V DC
2	Z0350003136NA	ELECTROMAGNET SUPPORT
3	VIT0000028	M 3*14 TCB SCREW
4	VIT0000005	SCREW HEAD TAP CAP M3X12
5	Z0350003114	PIN
6	VIT0009161	D.3.2 x 8 x 0.4 SPRING
7	VIT0004814	NUT M3
8	Z0350003112R	MICROSWITCH 7GR
9	Z0350003312R	MICROSWITCH 9GR
10	Z0350003112	PIN
11	VIT0007101	BENZING CLIP
12	VIT0000009	SCREW HEAD TAP CAP M3X30
13	VIT0004502	NUT M3
14	Z0350003113NA	REGULATION WHEEL
15	Z0350003122	LOCKNUT
16	7500102053	SPACER
17	Z0350003115	SPRING
18	VIT0004813	NUT M3
19	VIT0002011	SCREW ST HEAD CAP M2.9X9.5
20	Z0350003105NA	BATCHER BODY BLACK
21	Z0350003314NA	MICROSWITCH CONTROL LEVER from serial 05010001
22	Z0350003301NA	GROUNDS CHUTE BLACK
23	Z0350003302	AGITATOR
24	Z0350003126NA	ELECTROMAGNET ROD
25	VIT0005105	PIN 2X10
26	Z0350003111NA	PIN BLACK
27	VIT0002001	SCREW ST HEAD CAP M2.9X6.5
28	Z0350003129	SPRING
29		
30	VIT0003102	SPRING WASHER 3,2
31	Z0350003124	BATCHER SPRING
32	Z0350003128NA	BATCHER COVER
33	VIT0002469	SCREW HEAD TAP M3.5X10
100	Z0350003110CL	§ BATCHER 24V DC
101	Z0350003310CL	§ BATCHER 24V DC

www.rheavendors.com tel: 0039 02 966 551 fax: 0039 02 96 55 086 email: rheavendors@rheavendors.com exclusive property of rheavendors group

grinder- batcher + engine

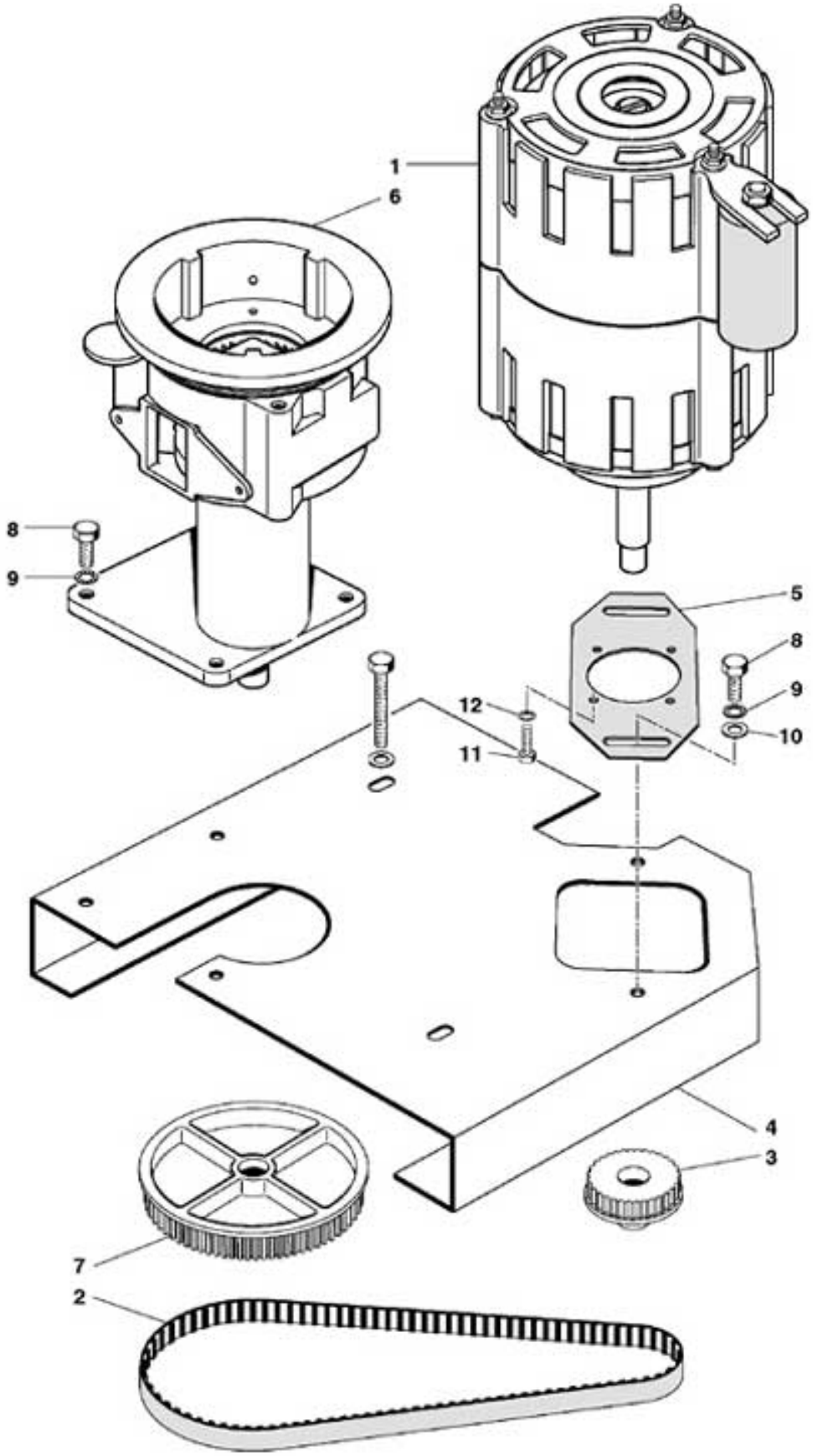

www.rheavendors.com tel: 0039 02 966 551 fax: 0039 02 96 55 086 email: rheavendors@rheavendors.com exclusive property of rheavendors group

grinder- batcher + engine		
Pos.	**Code**	**Description**
1	Z0090003016	MOTOR 150-40 220V
2	Z0090006003	TOOTHED BELT
3	Z0320004055	GRINDER PULLEY
4	Z0320004206	MILL MOTOR SUPPORT
5	Z0320004208CK	ADJUSTEMENT PLATE RAL7037
6	Z0320004020CL	§ GRINDER
7	Z0320004022	GRINDER PULLEY
8	VIT0000213	SCREW HEX HEAD M6X12
9	VIT0003105	SPRING WASHER 6,4
10	VIT0003005	WASHER 6,4X12X1,6
11	VIT0000205	SCREW HEX HEAD M4X10
12	VIT0003103	SPRING WASHER 4,3
100	Z0320004201CL	§ GRINDER+MOTOR

www.rheavendors.com tel: 0039 02 966 551 fax: 0039 02 96 55 086 email: rheavendors@rheavendors.com exclusive property of rheavendors group

micro coffee group motor support

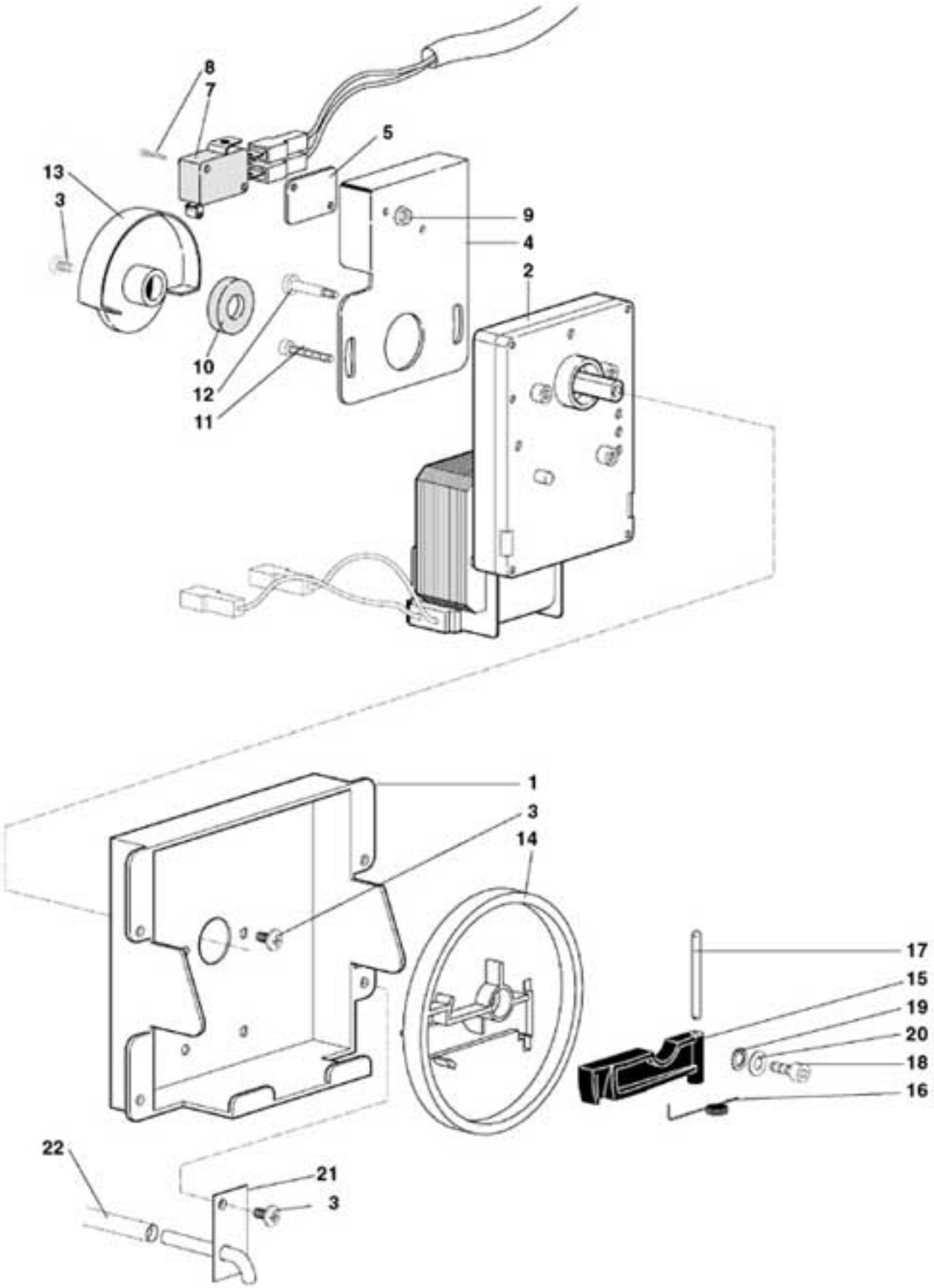

www.rheavendors.com tel: 0039 02 966 551 fax: 0039 02 96 55 086 email: rheavendors@rheavendors.com exclusive property of rheavendors group

micro coffee group motor support		
Pos.	**Code**	**Description**
1	Z0260010102CK-06	MICRO GROUP MOTOR SUPPORT 7037
2	Z0090002186	GEAR MOTOR 8.5 RPM 220/50
3	VIT0000030	SCREW HEAD TAP CAP M4X7
4	Z0250008093	MICRO PLATE
5	4600010014	SPACER
7	ELE0001529	MICROSWITCH WITH LEVER
8	VIT0000006	SCREW HEAD TAP CAP M3X16
9	VIT0004701	NUT M3
10	Z0250008091	SPACER
11	Z0250008092	M4 SPECIAL SCREW
12	VIT0005521	SCREW HEX HEAD REC TAP M4X25
13	Z0250008043	MICRO GROUP READER DISK
14	Z0250008012	MOTOR CRANK
15	Z0250008034	HOOKING LEVER
16	Z0250008059	SPRING
17	VIT0005205	DOWEL PIN 4X40
18	VIT0005508	SCREW HEX HEAD REC TAP M4X12
19	VIT0003103	SPRING WASHER 4,3
20	VIT0003003	WASHER 4,3X8X0,8
21	Z0010020147	TUBE
22	TSIL07/11T	SILICON HOSE 7X11
100	Z0260010110R	MOTOR SUPPORT

www.rheavendors.com tel: 0039 02 966 551 fax: 0039 02 96 55 086 email: rheavendors@rheavendors.com exclusive property of rheavendors group

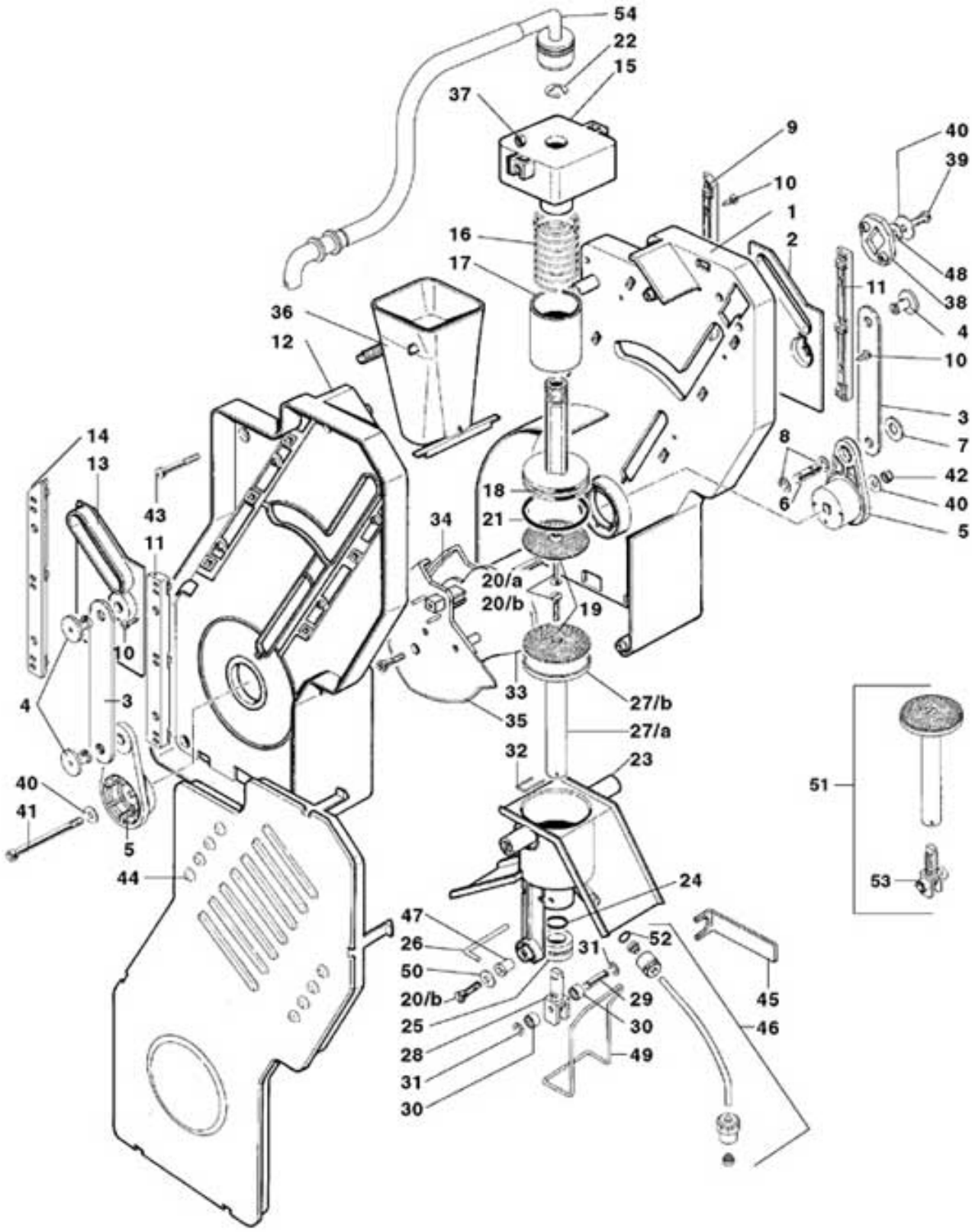

www.rheavendors.com tel: 0039 02 966 551 fax: 0039 02 96 55 086 email: rheavendors@rheavendors.com exclusive property of rheavendors group

micro coffee group		
Pos.	**Code**	**Description**
1	Z0250008005R	§ MICRO BREWER COVERS-L.H+R.H
2	Z0250008084	INFUSION CHAMBER CAM-RIGHT
3	Z0250008009	CONNECTING ROD
4	Z0250008028	CONNECTING ROD PIN
5	Z0250008011	RIGHT CRANK
6	Z0250008014	PIN
7	Z0250008042	ANTIVIBRATION WASHER
8	VIT0006515	RING 5
9	Z0250008031	REAR RIGHT GUIDE
10	VIT0002026	SCREW ST HEAD CAP M3.5X6.5
11	Z0250008033	FRONTAL GUIDE
12	Z0250008005R	§ MICRO BREWER COVERS-L.H+R.H
13	Z0250008085	INFUSION CHAMBER CAM-LEFT
14	Z0250008032	REAR LEFT GUIDE
15	Z0250008086	UPPER FILTER SUPPORT
16	Z0250008024	UPPER FILTER SPRING
17	Z0250008087	SPRING COVER PIPE
18/a	Z0250008026R	§ UPPER COFFEE FILTER D 36 For Coffee beans group D. 36 (Pos.18/a+19/a+21/a+20)
18/b	Z0250008208R	§ UPPER COFFEE FILTER D.40 For Coffee beans group D. 40 --- (Pos. 18/b+19/b+21/b+20)
19/a	Z0250008099	COFFEE FILTER For Coffee beans group D. 36
19/b	Z0250008211	COFFEE FILTER D 37.3 For Coffee beans group D. 40
20/a	VIT0001202	SCREW COUNT FLAT HEAD M3X14
20/b	VIT0000121	SCREW COUNT FLAT HEAD M3X8
21/a	GUA0000080	OR 4112 RED SILICONE LSR70 For Coffee beans group D. 36
21/b	GUA0000097	OR 4131 RED SILICONE LSR70 For Coffee beans group D. 40
22	VIT0006513	RING 8
23/a	Z0250008046R	§ BREWER INFUSION CHAMBER For Coffee beans group D. 36
23/b	Z0250008206R	§ LOWER COFFEE FILTER D.40 For Coffee beans group D. 40
24	GUA0000065	OR 112 SILICON
25	Z0250008053	LOWER INLET CUP BUSH
26	Z0250008029	FUNNEL PIN
27/a	Z0250008108	LOWER FILTER SHAFT
27/b	Z0250008122	COFFEE FILTER LOW 36 For Coffee beans group D. 36
27/c	Z0250008209IC	LOWER COFFEE FILTER D.40 For Coffee beans group D. 40
28	Z0250008106	BEARING SUPPORT
29	Z0250008021	BEARING SHAFT
30	Z0250008022	BEARING
31	VIT0006517	RING 3.2
32	Z0250008027	LOWER FILTER PIN
33	Z0250008083	CAM
34	Z0250008016	CAM RIGHT
35	Z0250008017	CAM LEFT
36	Z0250008036	COFFEE FUNNEL
37	VIT0004803	NUT M4
38	Z0250008035	SETTING PLATE
39	VIT0000032	SCREW HEAD TAP CAP M4X8
40	VIT0003309	WASHER4,3X16X1,5

www.rheavendors.com tel: 0039 02 966 551 fax: 0039 02 96 55 086 email: rheavendors@rheavendors.com exclusive property of rheavendors group

micro coffee group		
41	VIT0005523	SCREW HEX HEAD REC TAP M4X60
42	VIT0004810	NUT M4
43	VIT0002461	SCREW HEAD TAP M4.2X26
44	Z0250008039CM	MICRO BREWER COVER-L.H RAL9006
44	Z0250008039IC	MICRO BREWER COVER-L.H RAL2011
45	Z0250008048	KEY FOR NUT
46	Z0250008150CL	§ WATER INLET PIPE
47	VIT0009203	INSERT
48	VIT0003451	SPRING WASHER 4,2
49	Z0250008094	SCRAPER
50	Z0250008088	WASHER
51	Z0250008109R	§ LOW.COFFEE FILTER D.36+BEAR.
52	GUA0000061	OR 2010 VITON 80 BLACK
53	Z0250008107R	BEARING SUPPORT
54	Z0250008140CL	§ COFFEE OUTLET PIPE
100	Z0250008001R	COFFEE BREWER MICRO D.36 For Coffee beans group D. 36
101	Z0250008201R	COFFEE BREWER MICRO D.40 For Coffee beans group D. 40
104	Z0250008108R	§ LOWER COFFEE FILTER D.36

www.rheavendors.com tel: 0039 02 966 551 fax: 0039 02 96 55 086 email: rheavendors@rheavendors.com exclusive property of rheavendors group

heated micro coffee group

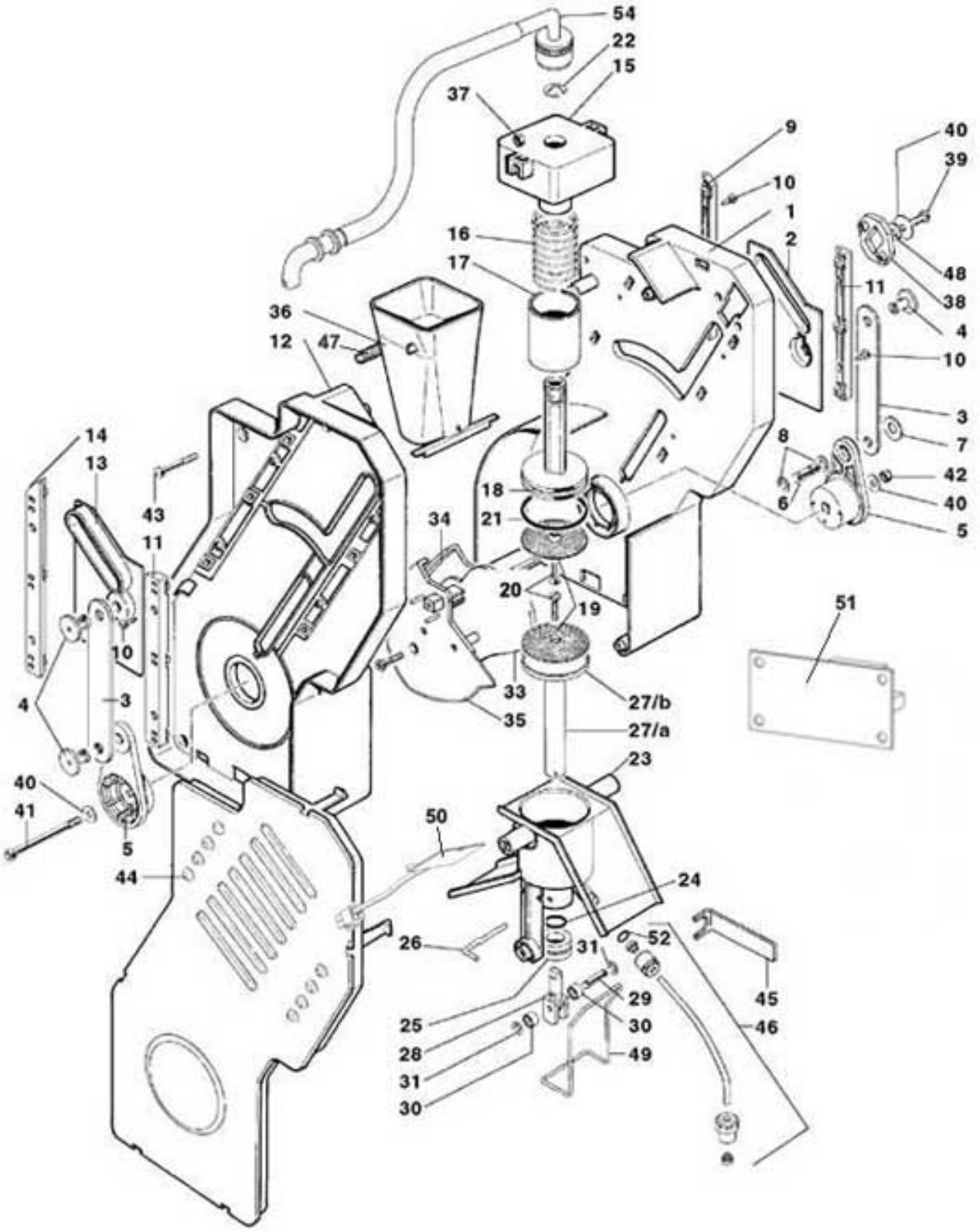

www.rheavendors.com tel: 0039 02 966 551 fax: 0039 02 96 55 086 email: rheavendors@rheavendors.com exclusive property of rheavendors group

heated micro coffee group		
Pos.	**Code**	**Description**
1	Z0250008005R	§ MICRO BREWER COVERS-L.H+R.H
2	Z0250008084	INFUSION CHAMBER CAM-RIGHT
3	Z0250008009	CONNECTING ROD
4	Z0250008028	CONNECTING ROD PIN
5	Z0250008011	RIGHT CRANK
6	Z0250008014	PIN
7	Z0250008042	ANTIVIBRATION WASHER
8	VIT0006515	RING 5
9	Z0250008031	REAR RIGHT GUIDE
10	VIT0002026	SCREW ST HEAD CAP M3.5X6.5
11	Z0250008033	FRONTAL GUIDE
12	Z0250008005R	§ MICRO BREWER COVERS-L.H+R.H
13	Z0250008085	INFUSION CHAMBER CAM-LEFT
14	Z0250008032	REAR LEFT GUIDE
15	Z0250008086	UPPER FILTER SUPPORT
16	Z0250008024	UPPER FILTER SPRING
17	Z0250008087	SPRING COVER PIPE
18	Z0250008226R	§ UPPER COFFEE FILTER D.36 For Coffee beans group D. 36 (From pos.18 to pos.21)
19	Z0250008019	COFFEE FILTER
20	VIT0000121	SCREW COUNT FLAT HEAD M3X8
21	GUA0000080	OR 4112 RED SILICONE LSR70
22	VIT0006513	RING 8
23	Z0250008215R1	BREWER CHAMBER
24	GUA0000065	OR 112 SILICON
25	Z0250008053	LOWER INLET CUP BUSH
26	Z0250008029	FUNNEL PIN
27/a	Z0250008108	LOWER FILTER SHAFT
27/b	Z0250008122	COFFEE FILTER LOW 36
28	Z0250008226	BEARING SUPPORT
29	Z0250008021	BEARING SHAFT
30	Z0250008022	BEARING
31	VIT0006517	RING 3.2
33	Z0250008083	CAM
34	Z0250008016	CAM RIGHT
35	Z0250008017	CAM LEFT
36	Z0250008036	COFFEE FUNNEL
37	VIT0004803	NUT M4
38	Z0250008035	SETTING PLATE
39	VIT0000032	SCREW HEAD TAP CAP M4X8
40	VIT0003309	WASHER4,3X16X1,5
41	VIT0005523	SCREW HEX HEAD REC TAP M4X60
42	VIT0004810	NUT M4
43	VIT0002461	SCREW HEAD TAP M4.2X26
44	Z0250008039CM	MICRO BREWER COVER-L.H RAL9006
44	Z0250008039IC	MICRO BREWER COVER-L.H RAL2011
45	Z0250008048	KEY FOR NUT
46	Z0250008150CL	§ WATER INLET PIPE

www.rheavendors.com tel: 0039 02 966 551 fax: 0039 02 96 55 086 email: rheavendors@rheavendors.com exclusive property of rheavendors group

heated micro coffee group		
47	Z0250008119	SPRING
48	VIT0003451	SPRING WASHER 4,2
50	Z0250008213R	§ HEATING ELEMENT
51	SCH0006880	HEATING ELEMENT BOARD
52	GUA0000061	OR 2010 VITON 80 BLACK
54	Z0250008140CL	§ COFFEE OUTLET PIPE
100	Z0250008220R	COFFEE BREWER MICRO D.36
101	Z0250008227R	§ BERING SUPPORT (Pos. 28-29-30-31)
102	Z0250008228R	§ LOW.COFFEE FILTER D.36+BEAR.

www.rheavendors.com tel: 0039 02 966 551 fax: 0039 02 96 55 086 email: rheavendors@rheavendors.com exclusive property of rheavendors group

ESPRESSO BOILER

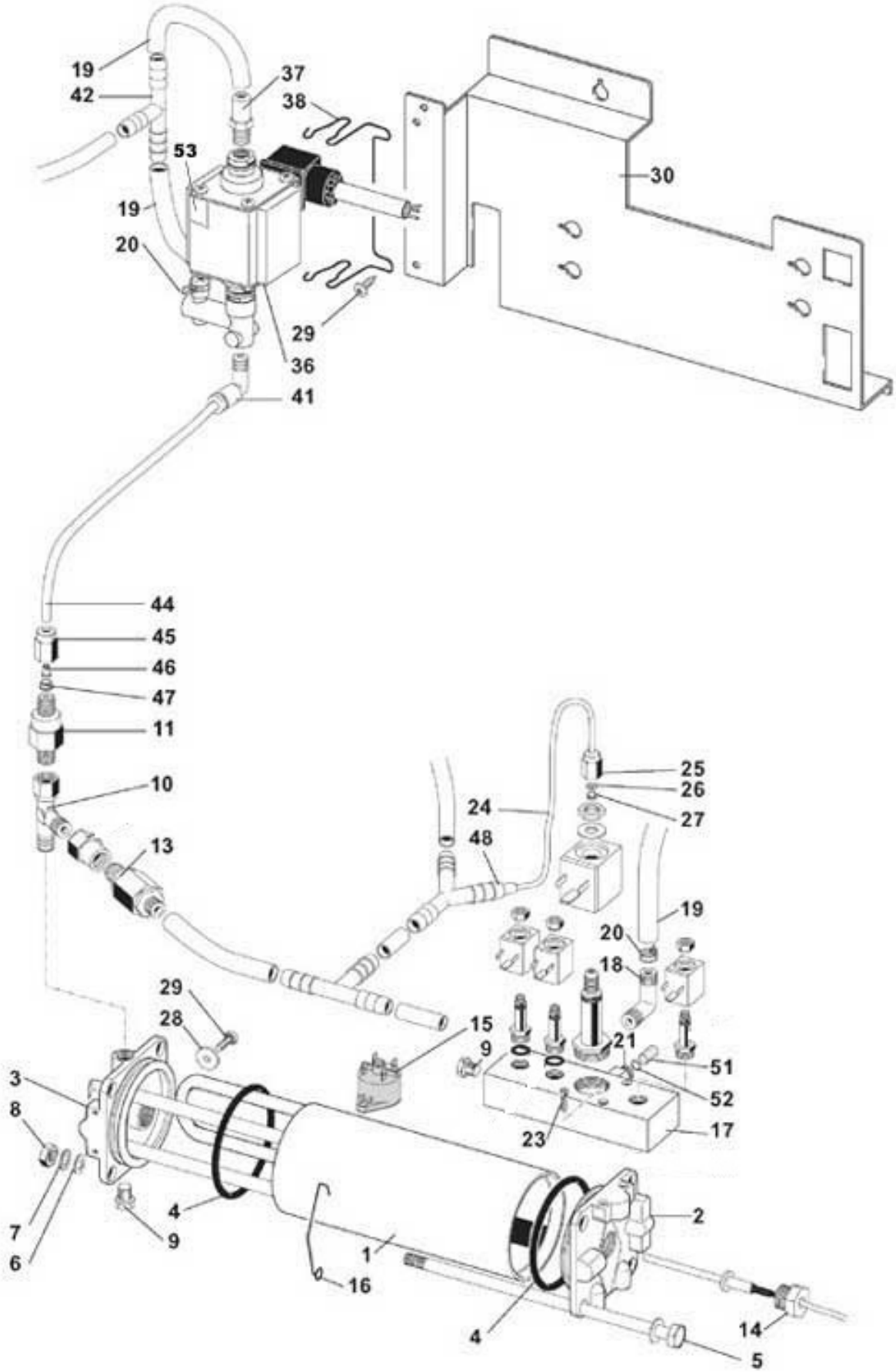

www.rheavendors.com tel: 0039 02 966 551 fax: 0039 02 96 55 086 email: rheavendors@rheavendors.com exclusive property of rheavendors group

ESPRESSO BOILER		
Pos.	**Code**	**Description**
1	Z0600012514	PRESS. WATER TANK 150MM
2	Z0600012671	FLANGE
3	Z0600012701	FLANGE
4	GUA0000047	OR 164 VITON 80 BLACK
5	Z0600012515	CONNECTOR
6	VIT0003206	WASHER 8,4X14X1,6
7	VIT0003402	SPRING WASHER 8,4
8	VIT0004506	NUT M8
9	4600020115	PLUG
10	Z0100001028	T CONNECTOR SO3700-1/8-6-6
11	Z0110002012R	§ SAFETY VALVE E:1/8M O:1/8F
13	Z0110002009	SAFETY VALVE 1/8F 1/8M
14	ELE0000969R	§ PROBE E + ACCESSORIES
15	ELE0009001	CLIXON 120 °C
16	250020087	SPRING
17/a	Z0110001087	VALVE BLOCK 2V 2W+1V 3W 24VDC
17/b	Z0110001091	VALVE BLOCK 3V 2W+1V 3W 24VDC
18	250020146	ELBOW 1/8
19	TSIL06/09T	SILICON HOSE 6X9
20	FASC000101	CLAMP
21	Z0110003106	STRAIGHT CONNECTOR
23	VIT0005510	SCREW HEX HEAD REC TAP M4X16
24	TTEF02/04T	PTFE PIPE 2X4
25	Z0100001001	TAP CONNECTOR SO20-4-1/8
26	Z0100002001	LOCKING RING SO1-4
27	Z0100003002	COPPER GASKET SO5-5-1/8
28	1600001098	RUBBER SPACER D. 4,5
29	VIT0000030	SCREW HEAD TAP CAP M4X7
30	Z0010021027	BOILER SUPPORT
39	VIT0003301	WASHER 4,3X12X1,5
40	VIT0004503	NUT M4
41	Z0100001056	ELBOW 804 6-1/8 OR VITON
42	Z0100003023	T CONNECTOR 462 TS UL
44	TTEF04/06T	PTFE PIPE 4X6
45	Z0100001002	CONNECTOR NUT
46	Z0100002005	NUT D.4
47	Z0100002002	LOCKING RING SO1-6
48	Z0100001065	CONNECTOR "Y"
51	Z0110003057	SPACER OR
52	GUA0000069	OR 2015 VITON 80 BLACK
100	Z0600012710R	§ PRESS. BOILER 230 V 150 MM
36/a	Z0110004002R	§ ESPRESSO PUMP For Coffee beans group D. 36
36/b	Z0110004041CLB	§ PUMP EX5 230VAC+BY PASS 80 For Coffee beans group D. 40
37/a	2500001139	STRAIGHT CONNECTOR For Coffee beans group D. 36
37/b	Z0110004023	CONNECTOR For Coffee beans group D. 40
38/a	Z0110004020	PUMP SUPPORT For Coffee beans group D. 36
38/b	Z0110004038	PUMP SUPPORT For Coffee beans group D. 40

www.rheavendors.com tel: 0039 02 966 551 fax: 0039 02 96 55 086 email: rheavendors@rheavendors.com exclusive property of rheavendors group

ESPRESSO BOILER		
53	ELE0000915	PUMP THERMOPROTECTOR For Coffee beans group D. 40

www.rheavendors.com tel: 0039 02 966 551 fax: 0039 02 96 55 086 email: rheavendors@rheavendors.com exclusive property of rheavendors group

boiler

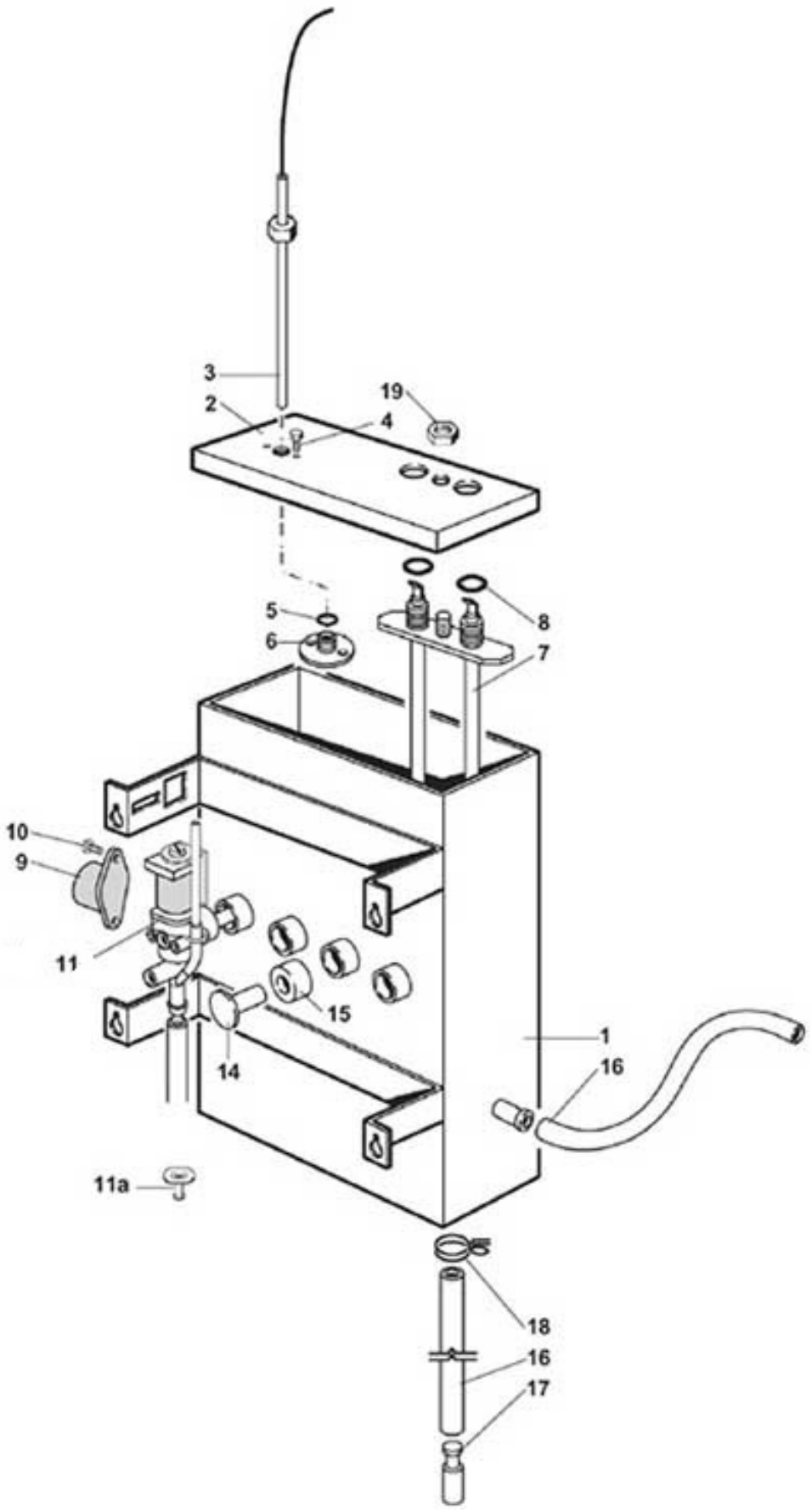

www.rheavendors.com tel: 0039 02 966 551 fax: 0039 02 96 55 086 email: rheavendors@rheavendors.com exclusive property of rheavendors group

boiler		
Pos.	**Code**	**Description**
1	Z0600017105	BOILER TANK
2/a	Z0600017062	BOILER COVER
2/b	Z0600017062	BOILER COVER
3	ELE0000958R1	§ TEMPERATURE PROBE
4	VIT0001105	SCREW HEX HEAD M3X8
5	GUA0000069	OR 2015 VITON 80 BLACK
6	NL202101016	PROBE HOLDER
7/a	Z0600011105	HEATING ELEMENT 1300 W 230 V
7/b	Z0600011115	HEATING ELEMENT 1300 W 230 V
8	GUA0000015	OR 119 NBR AL 75 BLACK
9	ELE0009008	CLIXON 92 °C
10	VIT0000014	SCREW HEAD TAP CAP M4X16
11	Z0110001108	VALVE 2W 24V DC from serial 04220001
11/a	Z0110010132	GASKET FOR EV 0110001108 from serial 04220001
11/b	Z0110010133	CORE from serial 04220001
12	Z0110001098	VALVE 2W 24V DC
13	Z0110001098	VALVE 2W 24V DC
14	Z0600011036	SOLEN. VALVE PLUG
15	GUA0002006	GASKET 4979 W.132.013.008
16	TSIL07/11T	SILICON HOSE 7X11
17	650001057	DRAINER PLUG
18	FASC000102	CLAMP
19	Z0600011107	PROBE NUT

www.rheavendors.com tel: 0039 02 966 551 fax: 0039 02 96 55 086 email: rheavendors@rheavendors.com exclusive property of rheavendors group

water inlet panel

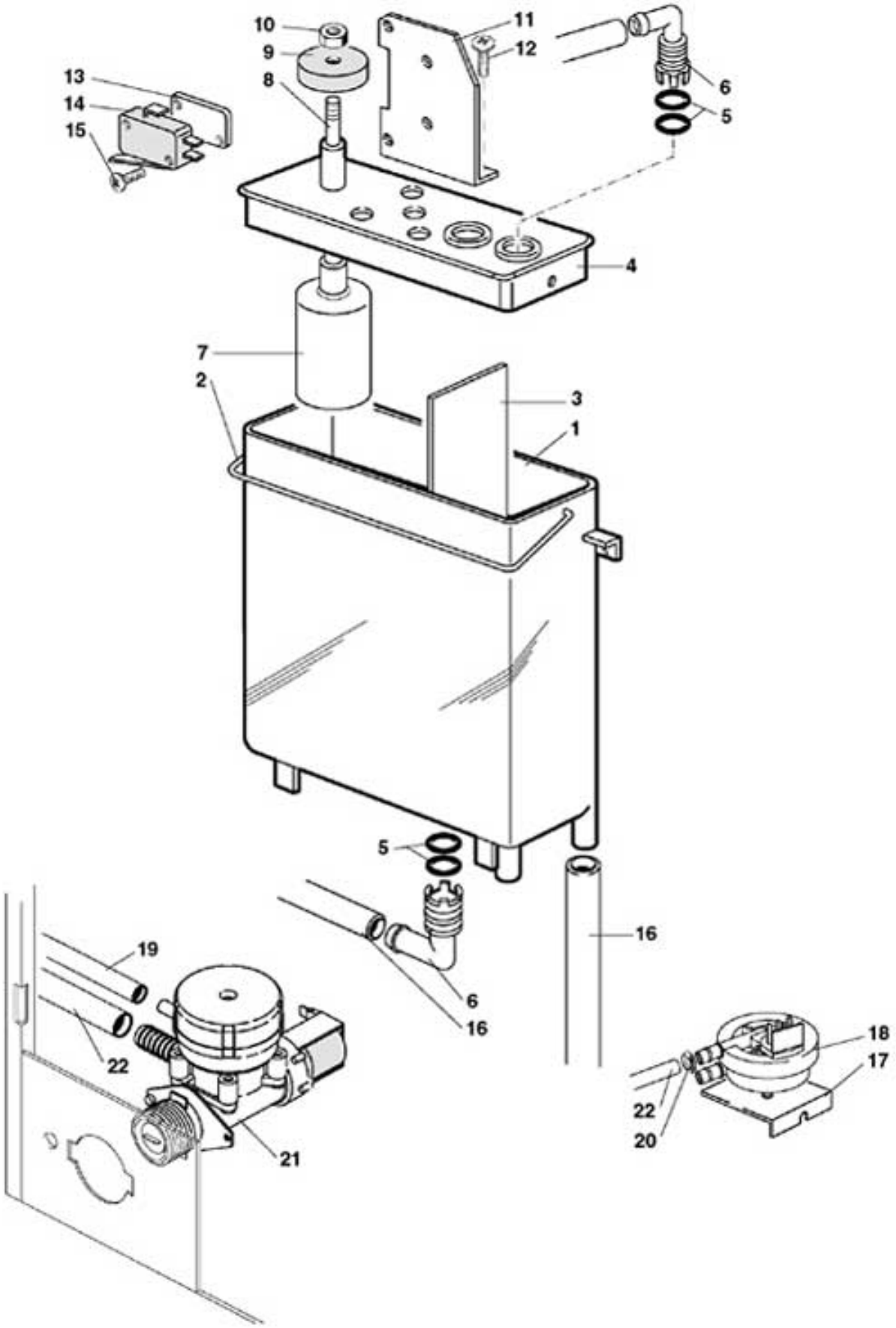

www.rheavendors.com tel: 0039 02 966 551 fax: 0039 02 96 55 086 email: rheavendors@rheavendors.com exclusive property of rheavendors group

water inlet panel		
Pos.	**Code**	**Description**
1	Z0800009201R	§ AIR BREAK Pos.1+4
2	800000035	FIXING COVER RING
3	800000010	AIR BREAK SPLITTER
4	Z0800009201R	§ AIR BREAK Pos.1+4
5	GUA0000043	OR 109 NBR AL 75 BLACK
6	Z0800009211	ELBOW CONNECTOR
7	600001065	WASTE FLOAT
8	800000016	WASTE FLOAT SHAFT INOX
9	800000017	DISK
10	VIT0004812	NUT M3.5
11	800000020A	AIR BREAK MICROSWITCH HOLDER
12	VIT0002014	SCREW ST HEAD CAP M2.9X13
13	4600010014	SPACER
14	ELE0001514	MICROSWITCH 3A 125-250VA
15	VIT0002012	SCREW ST HEAD CAP M2.9X16
16/a	TSIL07/11T-10	SILICON HOSE 7X11 MT.10
16/b	TSIL07/11T-50	SILICON HOSE 7X11 MT.50
17	Z0010021031	VOLUMETRIC COUNTER SUPPORT
18	Z0110007003	VOLUMETRIC COUNTER
19/a	TSIL05/08T-10	SILICON HOSE 5X8 MT.10
19/b	TSIL05/08T-50	SILICON HOSE 5X8 MT.50
20	FASC000101	CLAMP
21	Z0110001086	WATER INLET VALVE 24V DC
22/a	TSIL06/09T-10	SILICON HOSE 6X9 MT.10
22/a	TSIL06/09T-50	SILICON HOSE 6X9 MT.50
100	Z0800009220CL	§ AIR BREAK
101	Z0800009225CL	§ AIR BREAK

www.rheavendors.com tel: 0039 02 966 551 fax: 0039 02 96 55 086 email: rheavendors@rheavendors.com exclusive property of rheavendors group

control and power logic

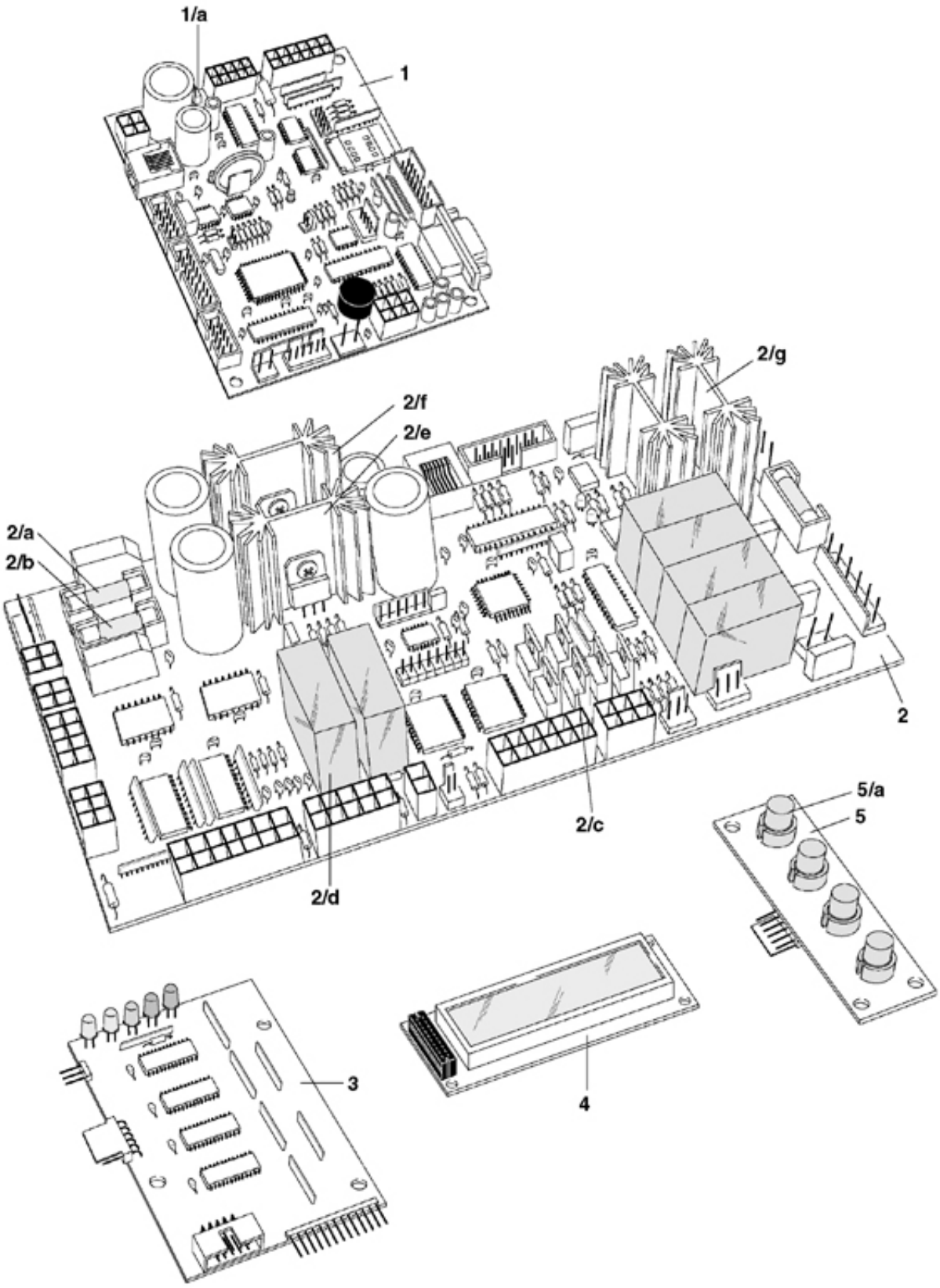

www.rheavendors.com tel: 0039 02 966 551 fax: 0039 02 96 55 086 email: rheavendors@rheavendors.com exclusive property of rheavendors group

control and power logic		
Pos.	**Code**	**Description**
1	SCH0007220	CPU W/HOLDER BATTERY BOARD
1/a		COMPONENT NO MORE SOLD
2	SCH0005140	POWER BOARD
2/a	ELE0003025	GLASS FUSE 5X20 2A
2/b	ELE0003028	GLASS FUSE 5X20 6,3A
2/c		COMPONENT NO MORE SOLD
2/d		COMPONENT NO MORE SOLD
2/e		COMPONENT NO MORE SOLD
2/f		COMPONENT NO MORE SOLD
2/g		COMPONENT NO MORE SOLD
3	SCH0003960	KEYPAD BOARD
4	SCH0004020	DISPLAY BOARD
5	SCH0003980	PROGRAM KEYPAD
5/a	ELT0030704	BUTTON D 6 ROUNDED

www.rheavendors.com tel: 0039 02 966 551 fax: 0039 02 96 55 086 email: rheavendors@rheavendors.com exclusive property of rheavendors group