vending machine

spare parts manual

www.rheavendors.com tel: 0039 02 966 551 fax: 0039 02 96 55 086 email: rheavendors@rheavendors.com exclusive property of rheavendors group

cabinet

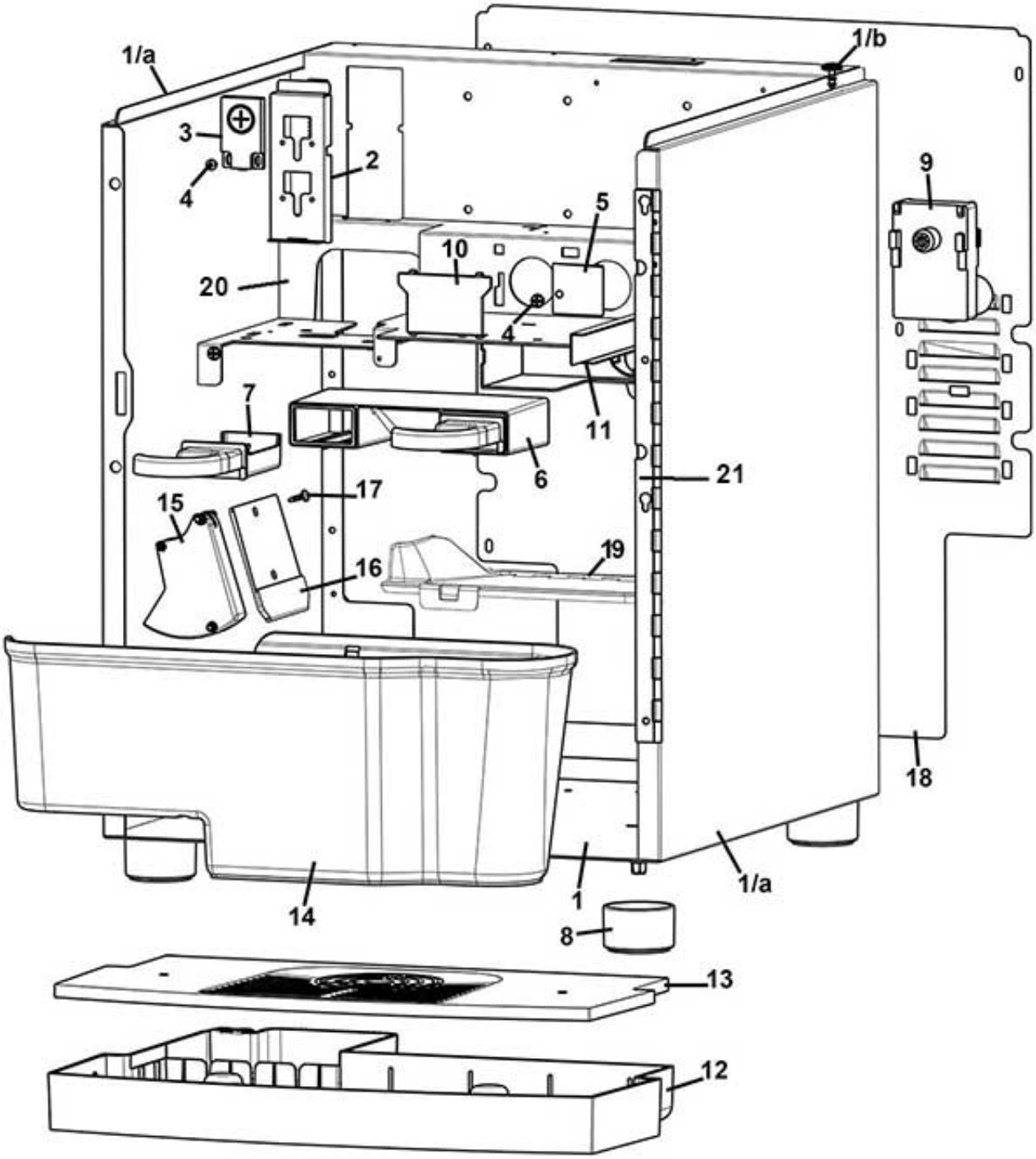

www.rheavendors.com tel: 0039 02 966 551 fax: 0039 02 96 55 086 email: rheavendors@rheavendors.com exclusive property of rheavendors group

cabinet		
Pos.	**Code**	**Description**
1	Z001A122100-01NA	CABINET BLACK
1/a	Z0010024183NA	SIDE COVER SX-DX XS
1/b	VIT0000106	SCREW COUNT FLAT HEAD M4X8
2	Z0010024167NA	COFFEE SENS COVER PLATE BLACK
3	ELE0004001R	§ CAPACITIVE SENSOR
4	VIT0001010	M 3x12 TCB SCREW
5	Z0010024186NA	PRODUCTS SENSOR COVER BLACK
6	Z0010027037	TRAP DRAWER
7	Z0010027022	TRAP DRAWER REMOVABLE
8	Z0010024111CL1	§ MACHINE FOOT D.50X29 RAL9005
9	Z0090002113	MOTOR 24 DC 97 RPM
10	Z0010020029NA	GEARBOX MOTOR PLUG BLACK
11	Z0010024187NA	WIRING SUPPORT (BLACK)
12	Z0020039036CL	§ DRIP TRAY+SPRING BLACK
13/1	Z0010028454	DOUBLE COFFEE DRIP TRAY GRID
13/2a	Z0010028459	WIRE S.STEEL DRIP TRAY GRID
13/2b	Z0020039144NA	WIRE S.STEEL DRIP TRAYGRID SUP
13/3	Z0020039035NA	DRIP TRAY GRID BLACK
14	Z0010024154	GROUNDS CONTAINER
15	Z0010024164-02	GROUNDS EJECTOR
16	Z0010024165	GROUNDS EJECTOR PLATE
17	VIT0002027	SCREW ST HEAD CAP M3.5X13
18	Z0010024032-02NA	REAR PANEL (BLACK)
19	Z001A128000NA-03	WASTE PADS CONTAINERLID
20	Z0010024191NA	GRINDER MOTORIZED SUPPORT
21	Z001A122121	DOOR HINGE
100	Z0010024164R	§ GROUNDS EJECTOR Pos.15+16+17

www.rheavendors.com tel: 0039 02 966 551 fax: 0039 02 96 55 086 email: rheavendors@rheavendors.com exclusive property of rheavendors group

UPPER COVER

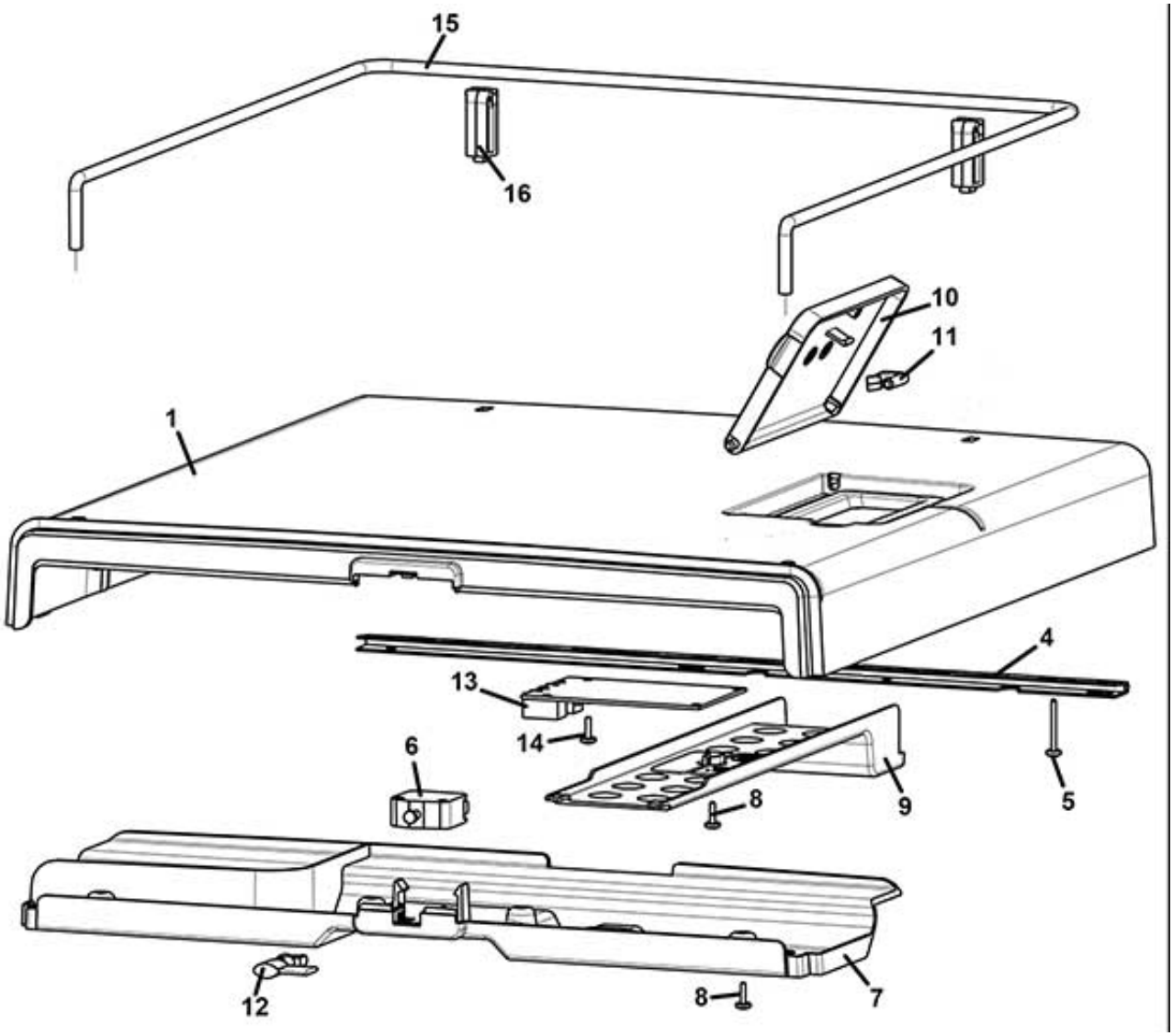

www.rheavendors.com tel: 0039 02 966 551 fax: 0039 02 96 55 086 email: rheavendors@rheavendors.com exclusive property of rheavendors group

UPPER COVER		
Pos.	**Code**	**Description**
1	Z0010024116-03NA	UPPER COVER XS-08 RAL 9005
4	Z0010024012	HINGE D.5,5 L.390
5	VIT0002456	SCREW HEAD TAP M3.5X25
6	ELE0002019	SWITCH 16A 250V
7	Z0010024114NA	UPPER COVER CLOSING BLACK
8	VIT0002469	SCREW HEAD TAP M3.5X10
9	Z0010024119NA	CABLE COVER
10	Z0010024118NA	INLET WATER LID XS08 RAL 9005
11	Z0020037124NA	PIN
12	Z0270011109IC	SERVICE KEY RAL2011
13	SCH0006261	RFID CARD READER_1
14	VIT0002452	SCREW HEAD TAP M3.5X12
15	Z0010024124	GUARD RAIL 1 THREAD
16	Z0010027272AG	RING SUPPORT TRASPARENT

www.rheavendors.com tel: 0039 02 966 551 fax: 0039 02 96 55 086 email: rheavendors@rheavendors.com exclusive property of rheavendors group

rear cabinet

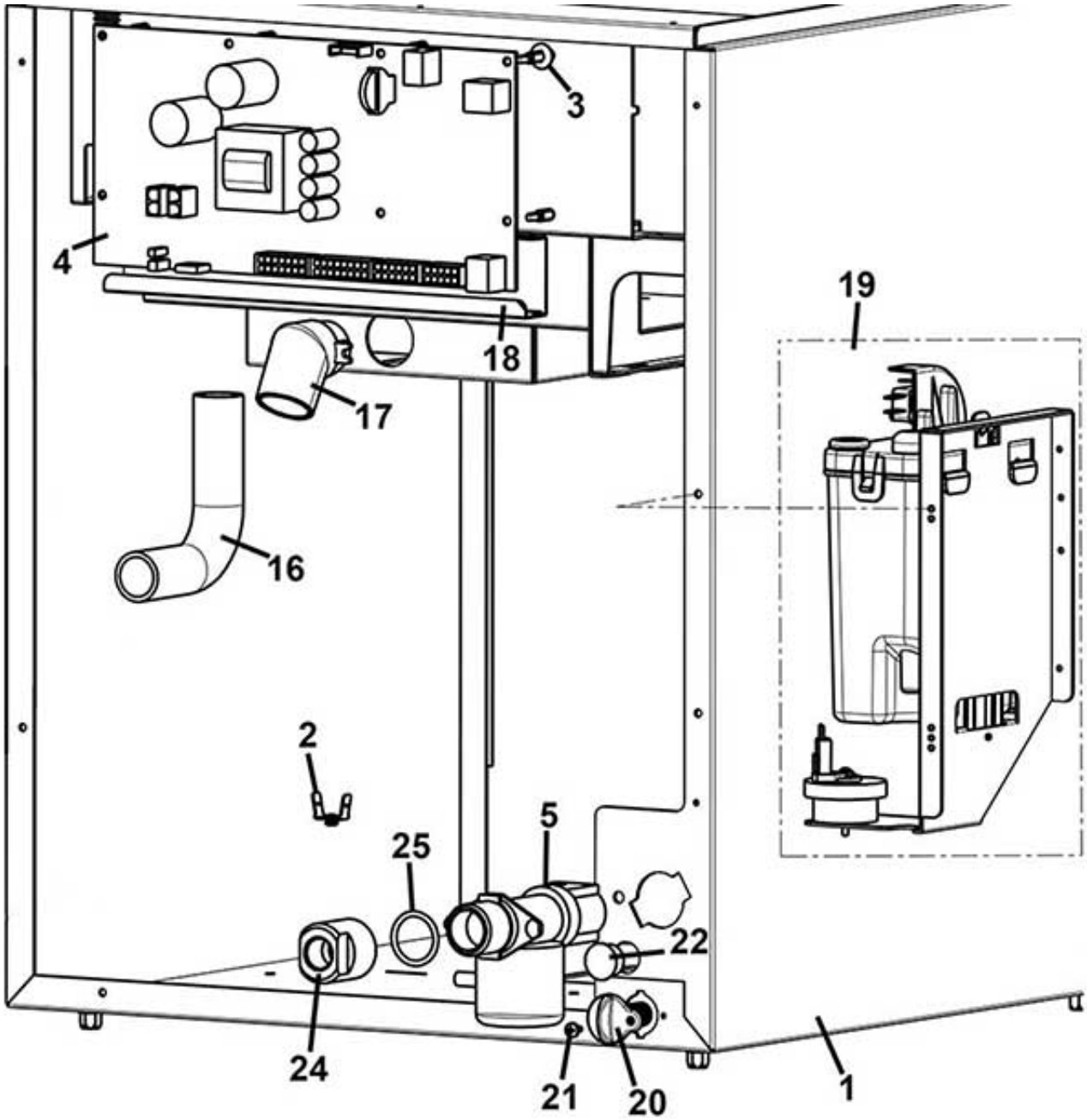

www.rheavendors.com tel: 0039 02 966 551 fax: 0039 02 96 55 086 email: rheavendors@rheavendors.com exclusive property of rheavendors group

rear cabinet		
Pos.	**Code**	**Description**
1	Z001A122100-01NA	CABINET BLACK
2	ELE0060520	GROUND PIN
3	ELE0062020	BOARD SUPPORT
4	SCH0008967-02	CPU/POWER BOARD 3V_1
5	Z0110001058	WATER INLET VALVE 24V DC
16	TEOL000001CL1	EXTRACTOR TUBE D.20 170MM
17	Z0010027043NA	EXTRACTOR TUBE BLACK
18	Z0010024161NA	WIRING SUPPORT (BLACK)
19		See table water inlet panel
20	Z0600016455	H2O OUTLET PLUG
21	VIT0002009	SCREW ST HEAD CAP M3.5X6.5
22	GUA0011010	PLUG
24	Z0100006001-01	F/F CYLINDRIC 3/4-3/8 REDUCT.
25	GUA0000021	OR 130 NBR AL 75 BLACK

www.rheavendors.com tel: 0039 02 966 551 fax: 0039 02 96 55 086 email: rheavendors@rheavendors.com exclusive property of rheavendors group

Electronic components support

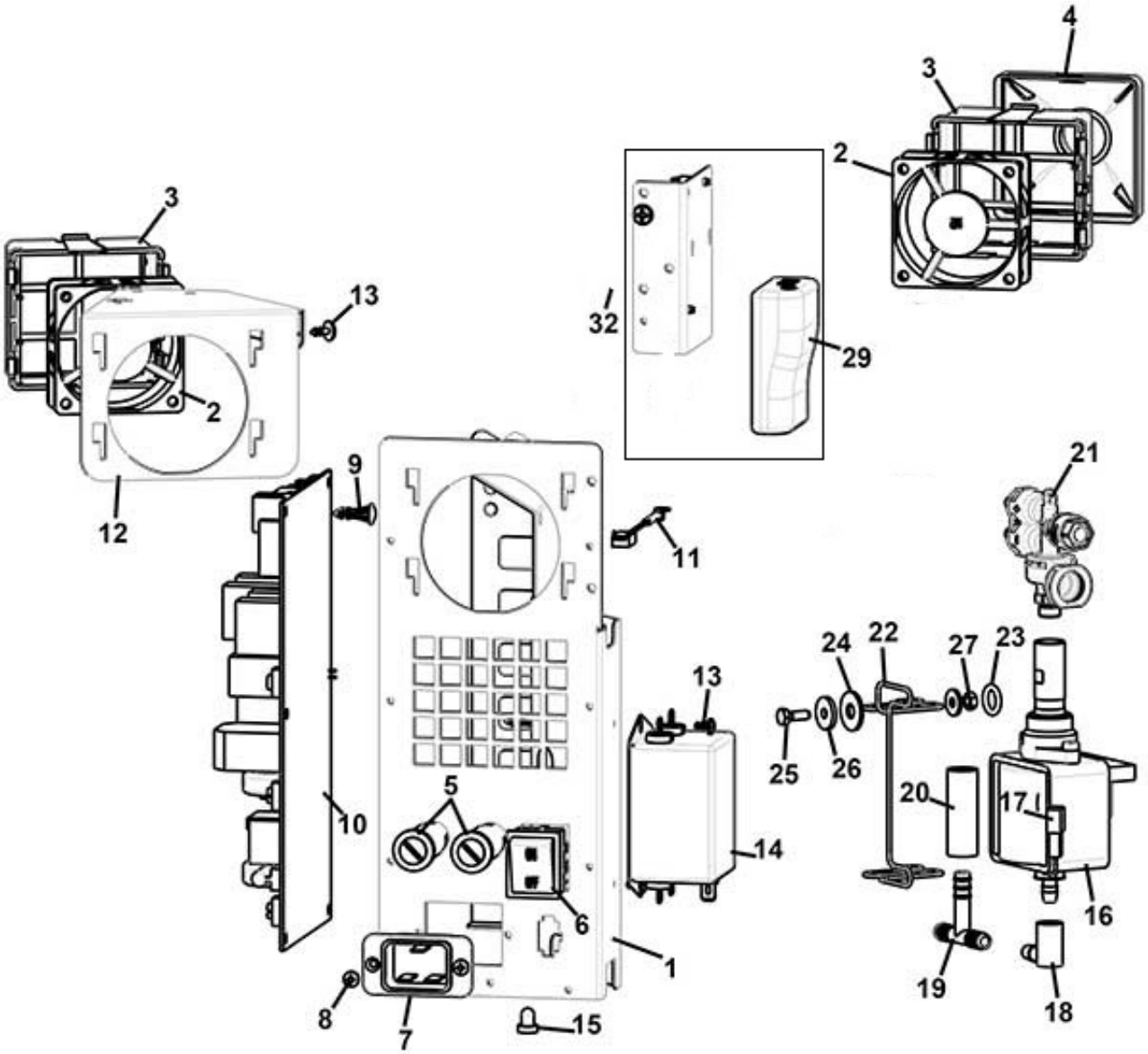

www.rheavendors.com tel: 0039 02 966 551 fax: 0039 02 96 55 086 email: rheavendors@rheavendors.com exclusive property of rheavendors group

Electronic components support		
Pos.	**Code**	**Description**
1	Z0130013067-03	ELECTRIC COMPONENT SUPP.
2	ELE0000461	FAN 24V DC-HIGH SPEED
3	Z0010027064	FAN SUPPORT
4	Z0010027065	FAN CONNECTOR
5	ELE0003509CL1	FUSE HOLDER+FUSE 16A
6	ELE0002020	BIPOLAR SWITCH 20A 250V
7	ELE0002350	MAINS SOCKET 16A
8	VIT0002010	SCREW ST HEAD CAP M3.5X9.5
9	ELE0062020	BOARD SUPPORT
10	SCH0009864	VARITHERM BOARD_3
11	ELE0000989CL	PROBE
12	Z0130013064	FAN SUPPORT INDUCTION BOARD
13	VIT0002009	SCREW ST HEAD CAP M3.5X6.5
14	ELE0009066	NOISE FILTER 16A
15	Z0020018061	SELECTION BUTTON PLUG
16/a	Z0110004063	PUMP EP5 230V 50HZ
16/b	Z0110004067	PUMP EP5 220V 50/60HZ For version 220V
17	ELE0000915	PUMP THERMOPROTECTOR
18	Z0110004023	CONNECTOR
19	Z0100003022	T CONNECTOR 461 TS UL
20/a	TSIL05/08T-10	SILICON HOSE 5X8 MT.10
20/b	TSIL05/08T-50	SILICON HOSE 5X8 MT.50
21	Z0110001151R	VALVE 3W W/BY-PASS 11BAR
22	Z0110004038	PUMP SUPPORT
23	GUA0000043	OR 109 NBR AL 75 BLACK
24	1600001098	RUBBER SPACER D. 4,5
25	VIT0000013	SCREW HEAD TAP CAP M4X12
26	VIT0003301	WASHER 4,3X12X1,5
27	VIT0004503	NUT M4
28	Z0010028236	MODEM SIERRA SUPPORT
29	KITTMON020	JANZTEC TM-ON KIT Include Modem+cable+antenna
32	KITTMON021	KIT TMON XSGR-EC JANZTEC Kit with support to adapt to xs Gr_Ec

www.rheavendors.com tel: 0039 02 966 551 fax: 0039 02 96 55 086 email: rheavendors@rheavendors.com exclusive property of rheavendors group

DOOR

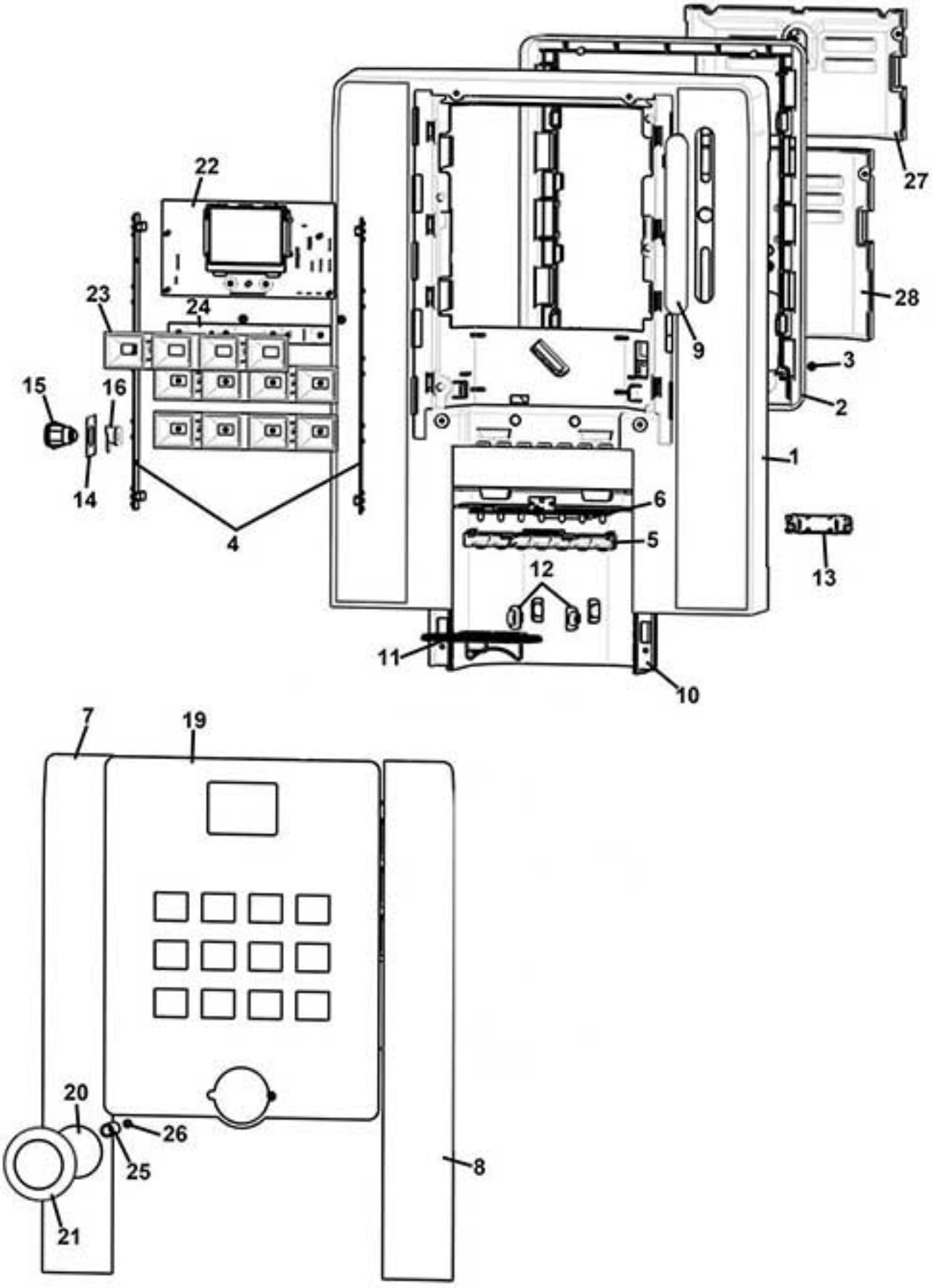

www.rheavendors.com tel: 0039 02 966 551 fax: 0039 02 96 55 086 email: rheavendors@rheavendors.com exclusive property of rheavendors group

DOOR		
Pos.	**Code**	**Description**
1	Z0020039131CM	DOOR (RAL9006)
2	Z0020039132CM	DOOR FRAME (RAL9006)
3	VIT0002466	SCREW HEAD TAP M3.5X16
4	SCH0008120	LIGHTING BOARD
5	Z0020039078TR	CUP STAT.ENLIGHTENMENT SUPPORT
6	SCH0008144	LIGHTING CUP STATION BOARD
7/a	1030000091	LEFT LATERAL PANEL (BROWN)
7/b	1030000120	LEFT LATERAL PANEL (BLACK)
7/c	1030000118	LH SIDE DOOR PANEL SILVER
8/a	1030000110	RIGHT LATERAL PANEL (BROWN)
8/b	1030000121	RIGHT LATERAL PANEL (BLACK)
8/c	1030000119	RH SIDE DOOR PANEL (SILVER)
9	Z0020039416	COIN ENTRY BLANK PLATE
10	Z0020039071XM	CUP STATION FRAME (METALLIC)
11/a	Z0010028455	S.STEEL CUPS SUPPORT
11/b	Z0010028502	WIRE S.STEEL SINGLE CUP SUPP.
11/c	Z0010028450	S.STEEL DOUBLE CUPS SUPPORT
11/d	Z0020039072NA-02	CUP SUPPORT BLACK
12	Z0020039073NA	CUP SUPPORT PIN BLACK
13	Z0020039087-03IC	CUP HOLDER BRACKET
14	Z0020037014	LOCK PLATE
15/a	SER0000024/1	LOCK INOX RVI MM20 C.3374
15/b	SER0000023	LOCK RIELDA
16	Z0020037015	LOCK PLATE
19/a	1030000201R	§ PLEXIGLASS+CAP. KEYPAD+PANEL
19/b	1030000202R	§ PLEXIGLASS+CAP. KEYPAD+PANEL
20	1030000188	ADHESIVE LOGO
21	Z0020039084CL	§ DOOR LOGO FRAME CROMO
22	SCH0009983-01	3,5" DISPLAY BOARD
23	Z0020037675AB	LIGHT BUTTONS GUIDE
24	SCH0010060	KEYPAD LIGHTING BOARD
25	Z0020039137	SPACER
26	VIT0002461	SCREW HEAD TAP M4.2X26
27	Z0020039134IC	UPPER DOOR RAL2011
28	Z0020039076-01NA	LOWER INTER. DOOR COVER BLACK

www.rheavendors.com tel: 0039 02 966 551 fax: 0039 02 96 55 086 email: rheavendors@rheavendors.com exclusive property of rheavendors group

mixer plan (espresso version)

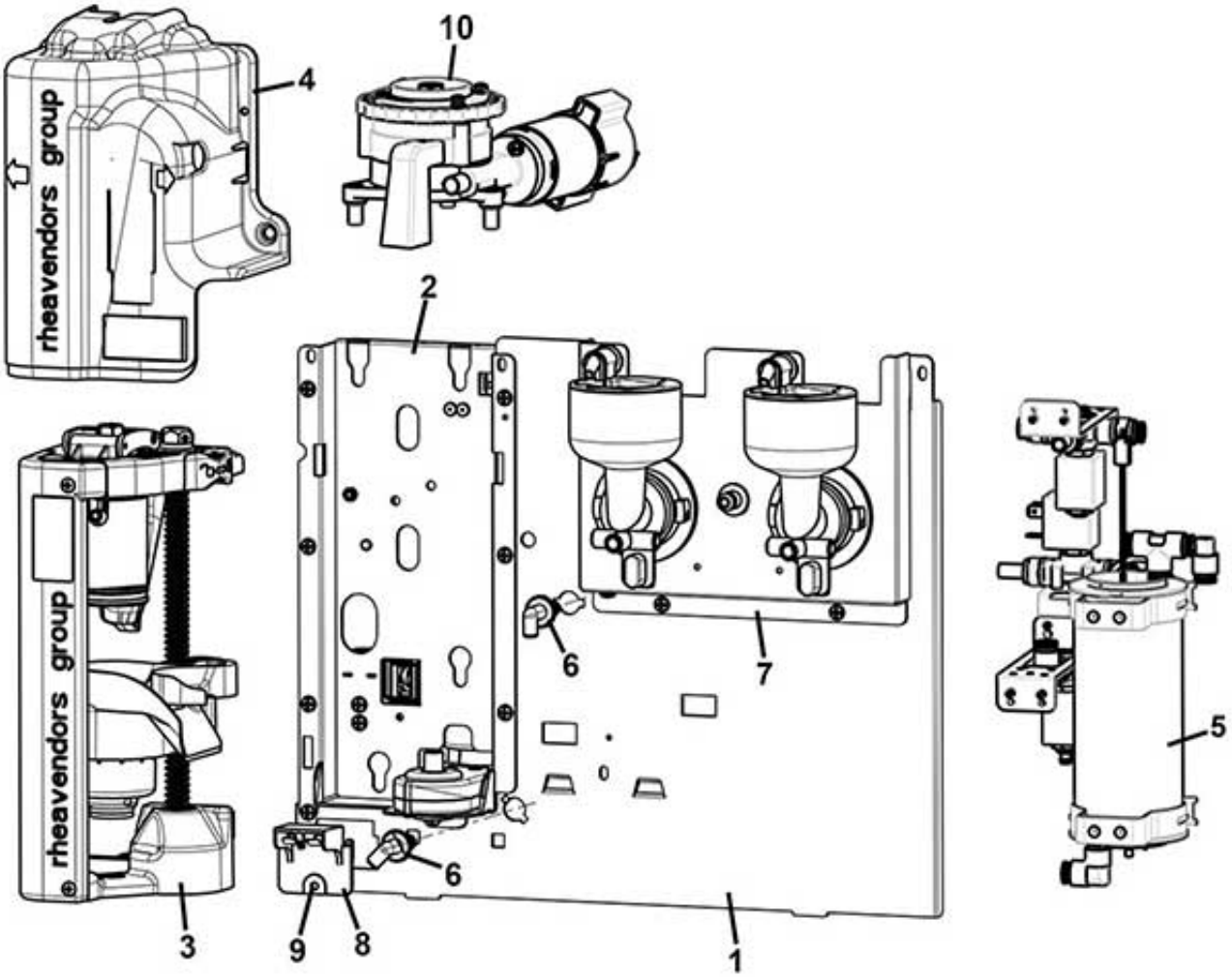

www.rheavendors.com tel: 0039 02 966 551 fax: 0039 02 96 55 086 email: rheavendors@rheavendors.com exclusive property of rheavendors group

mixer plan (espresso version)		
Pos.	**Code**	**Description**
1	Z0260014036-02NA	VARITHERM+VARIFLEX PLATE
2		See table PRO BREWER SUPPORT+MOTOR
3		See table PROFESSIONAL BREWER GROUP D.45
4	Z0250014007CL1	§ VARIFLEX BREWER COVER-TT
5		See table VARITHERM
6	Z0080100084	90° CONNECTOR
7		See table 2 MIXERS SUPPORT ASSEMBLY
8	Z0010020836CL	§DRIP TRAY SENSOR
9	VIT0002009	SCREW ST HEAD CAP M3.5X6.5
10		See table GRINDER

www.rheavendors.com tel: 0039 02 966 551 fax: 0039 02 96 55 086 email: rheavendors@rheavendors.com exclusive property of rheavendors group

VARITHERM

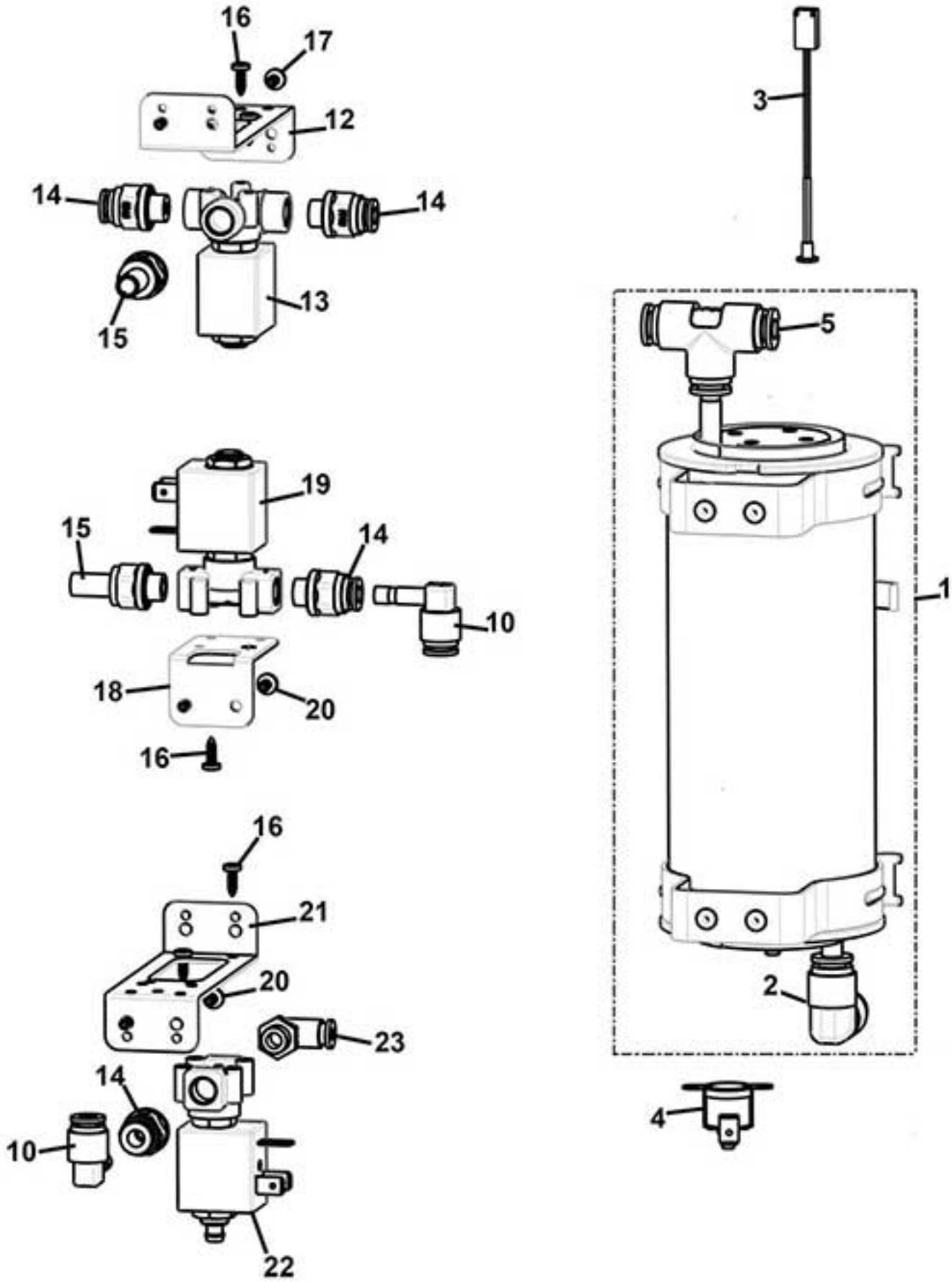

www.rheavendors.com tel: 0039 02 966 551 fax: 0039 02 96 55 086 email: rheavendors@rheavendors.com exclusive property of rheavendors group

VARITHERM		
Pos.	**Code**	**Description**
1/a	KITXSG0035	VARITHERM UPDATE KIT It includes the EV W/BYPASS and also the longer PTFE pipe. With reference to the TSB-20180129-04
1/b	KITXSG0036	BY-PASS+ELBOW KIT With reference to the TSB-20180727-01
1/c	KITXSG0037	COIL KIT With reference to the TSB-20180727-01
2	Z0100001158	FITTING ELBOW D6-D6 With reference to the TSB-20180727-01
3	ELE0000986	PROBE
4	ELE0000987	CLIXSON 105°
5	Z0100001154	T CONNECTOR
10	Z0100001156	FITTING ELBOW D6-D6
12	Z0600019915-P3	VALVE SUPPORT
13	Z0110001130	VALVE 2WX3INLET 24V DC 6W
14	Z0100001150	STRAIGHT CONNECTOR M G1/8 D6
15	Z0100001137-01	ADAPTOR CYLINDRICAL G1/8 D.8
16	VIT0002011	SCREW ST HEAD CAP M2.9X9.5
17	VIT0002009	SCREW ST HEAD CAP M3.5X6.5
18	Z0600019913	VALVE SUPPORT
19	Z0110001140	VALVE 2W 24V DC 6W
20	VIT0002401	SCREW ST HEAD CAP M3.5X9.5
21	Z0600019915-P3	VALVE SUPPORT
22	Z0110001145	VALVE 3WAY 5W 24V DC
23	Z0100001104	ELBOW 4-1/8 CONNECTOR
100	Z0600019920R	§ SOLUBLE VALVES VARITHERM XSG With reference to the TSB-20180129-01

www.rheavendors.com tel: 0039 02 966 551 fax: 0039 02 96 55 086 email: rheavendors@rheavendors.com exclusive property of rheavendors group

2 MIXERS SUPPORT ASSEMBLY

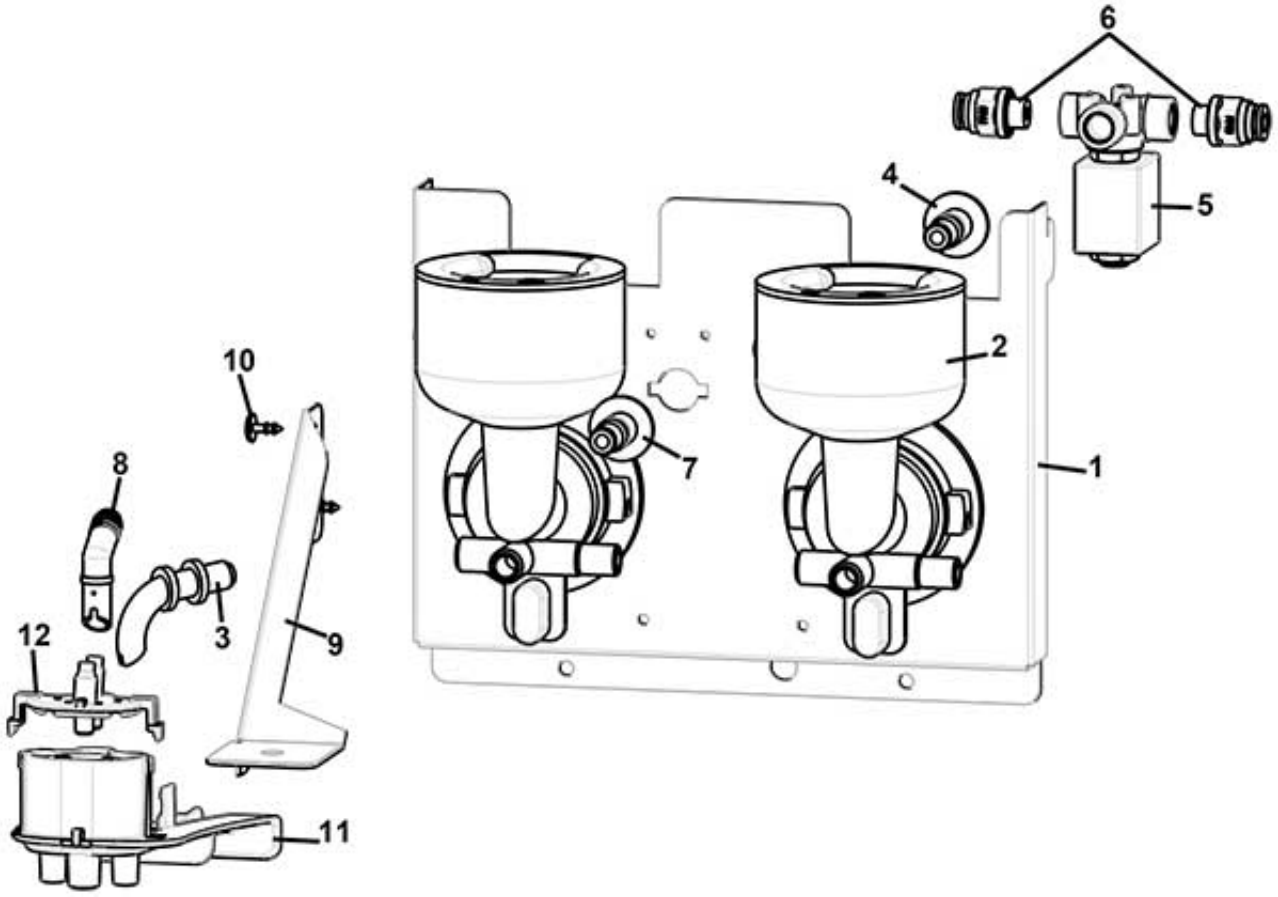

www.rheavendors.com tel: 0039 02 966 551 fax: 0039 02 96 55 086 email: rheavendors@rheavendors.com exclusive property of rheavendors group

2 MIXERS SUPPORT ASSEMBLY		
Pos.	**Code**	**Description**
11/a		
1	Z0080200036-04NA	MIXER SUPPORT
2		See table mixer
3	Z0010020052	PRODUCT NOZZLE
4	Z0080100153	MIXER CONNECTOR G 1/8
5	Z0110001130	VALVE 2WX3INLET 24V DC 6W
6	Z0100001150	STRAIGHT CONNECTOR M G1/8 D6
7	Z0080100013	MIXER CONNECTOR
8	Z0020039533	SPOUT DELIVERY 30° D.6
9	Z0080200014NA	HOSES SUPPORT
10	VIT0002401	SCREW ST HEAD CAP M3.5X9.5
11	Z0380020011CG	DOUBLE SPOUT NOZZLES HOLDER for double spout version
11/a	Z0020039552	NOZZLES HOLDER (BLACK) for std version
12	Z0380020012CG	DOUBLE SPOUT COVER for double spout version

www.rheavendors.com tel: 0039 02 966 551 fax: 0039 02 96 55 086 email: rheavendors@rheavendors.com exclusive property of rheavendors group

mixer

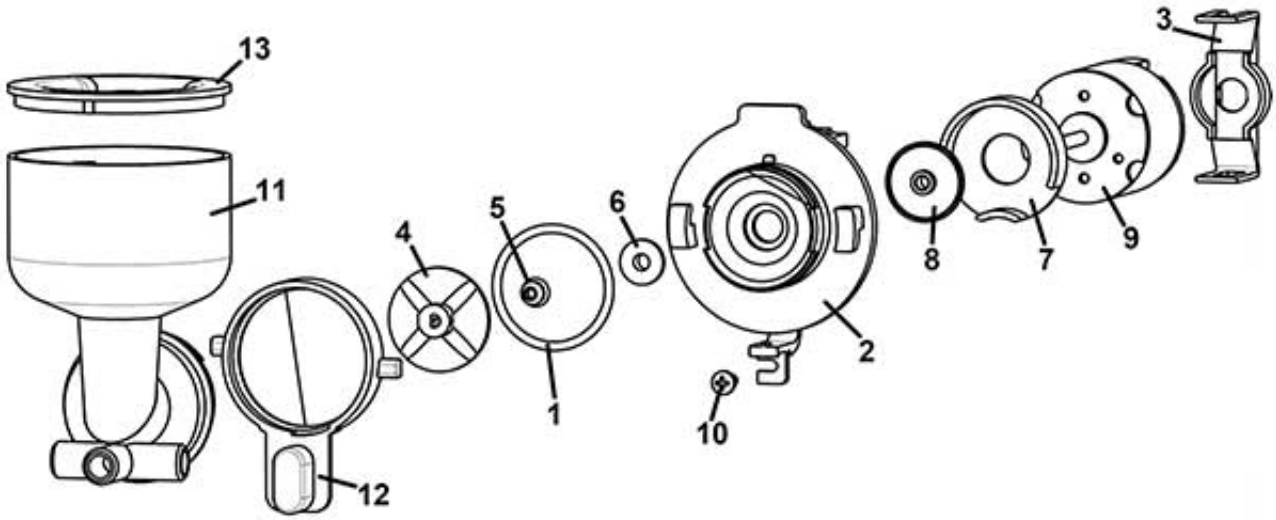

www.rheavendors.com tel: 0039 02 966 551 fax: 0039 02 96 55 086 email: rheavendors@rheavendors.com exclusive property of rheavendors group

mixer		
Pos.	**Code**	**Description**
1	GUA0000084	OR 3131 RED SILICONE A60
2	Z0080100005	MOTOR MIXER BASE
3	Z0080100009IC	MIXER MOTOR SUPPORT RAL2011
4	Z0080100011	MIXER FAN
5	Z0080100102	MIXER SHAFT GASKET
6	Z0080100015	MIXER BUSH
7	Z0080100023IC	MIXER COVER RAL2011
8	Z0080100024	MIXER FAN
9	Z0090003023	MIXER MOTOR 24V DC SHAFT D.4
10	VIT0002401	SCREW ST HEAD CAP M3.5X9.5
11/a	Z0080200101L	MIXING BOWL L.W/H20 BREAKER
11/b	Z0080200102R	MIXING BOWL R.W/H20 BREAKER
11/c	Z0080200103C	MIXING BOWL F.W/H20 BREAKER
12	Z0080100006IC	LOCK RING RAL2011
13	Z0080100008	UPPER RING
100	Z0080100001R	§ MIXER BOWL BASE+MOTOR (from pos.1 to pos.9)

www.rheavendors.com tel: 0039 02 966 551 fax: 0039 02 96 55 086 email: rheavendors@rheavendors.com exclusive property of rheavendors group

water inlet panel

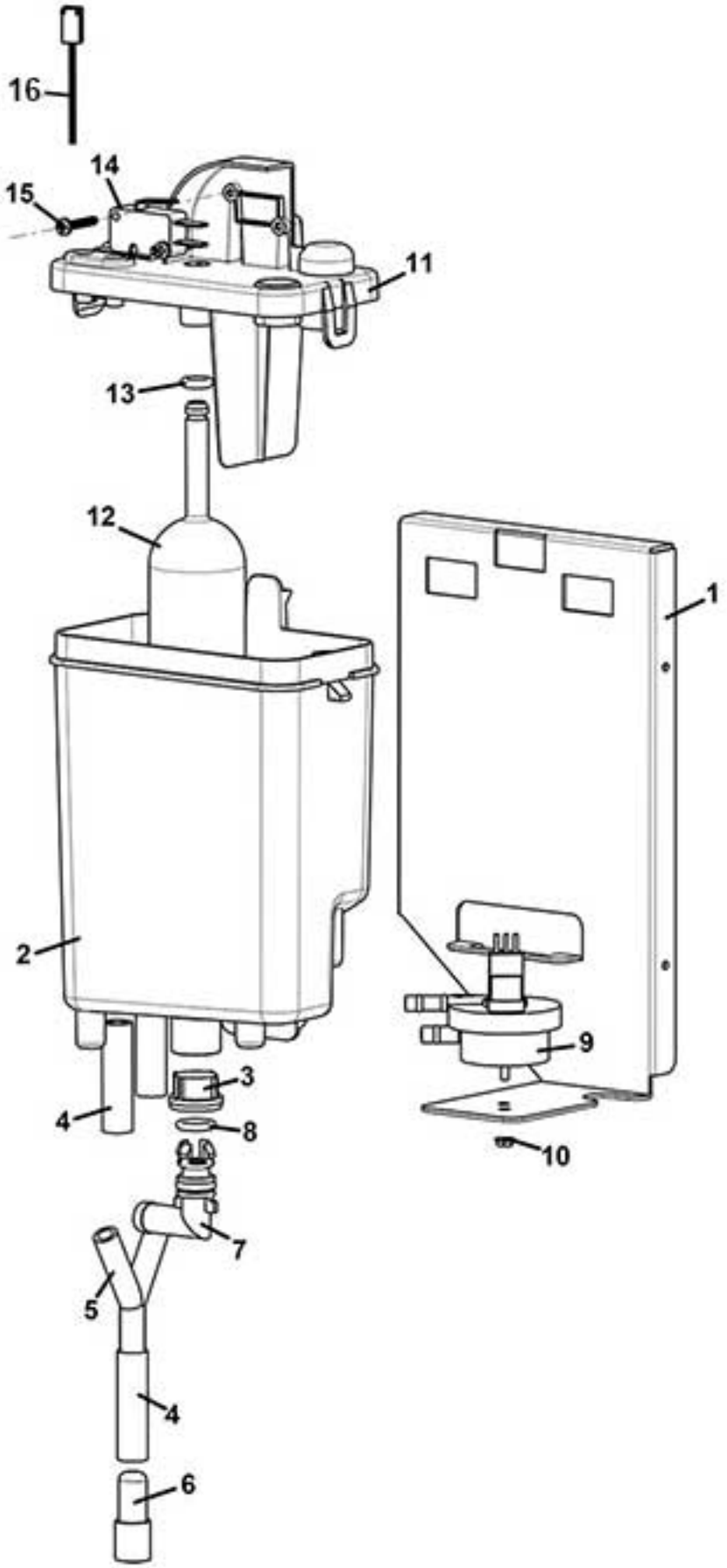

www.rheavendors.com tel: 0039 02 966 551 fax: 0039 02 96 55 086 email: rheavendors@rheavendors.com exclusive property of rheavendors group

water inlet panel		
Pos.	**Code**	**Description**
1	Z0010028248-06	HYDRAULIC HOLDER
2	Z0800013041	AIR BREAK TANK
3	Z0110020007	PLASTIC FILTER DIAM. 20
4/a	TSIL07/11T-10	SILICON HOSE 7X11 MT.10
4/b	TSIL07/11T-50	SILICON HOSE 7X11 MT.50
5	Z0100001065	CONNECTOR "Y"
6	650001057	DRAINER PLUG
7	Z0800009211	ELBOW CONNECTOR
8	GUA0000043	OR 109 NBR AL 75 BLACK
9	Z0110007003	VOLUMETRIC COUNTER
10	VIT0004701	NUT M3
11	Z0800013043	AIR BREAK COVER
12	Z0800013046	AIR BREAK WASTE FLOAT
13	GUA0000082	SILICON GASKET D.6
14	ELE0001514	MICROSWITCH 3A 125-250VA
15	VIT0002013	SCREW ST HEAD CAP M2.9X19
16	ELE0000985	PROBE 135xD.4

www.rheavendors.com tel: 0039 02 966 551 fax: 0039 02 96 55 086 email: rheavendors@rheavendors.com exclusive property of rheavendors group

GRINDER

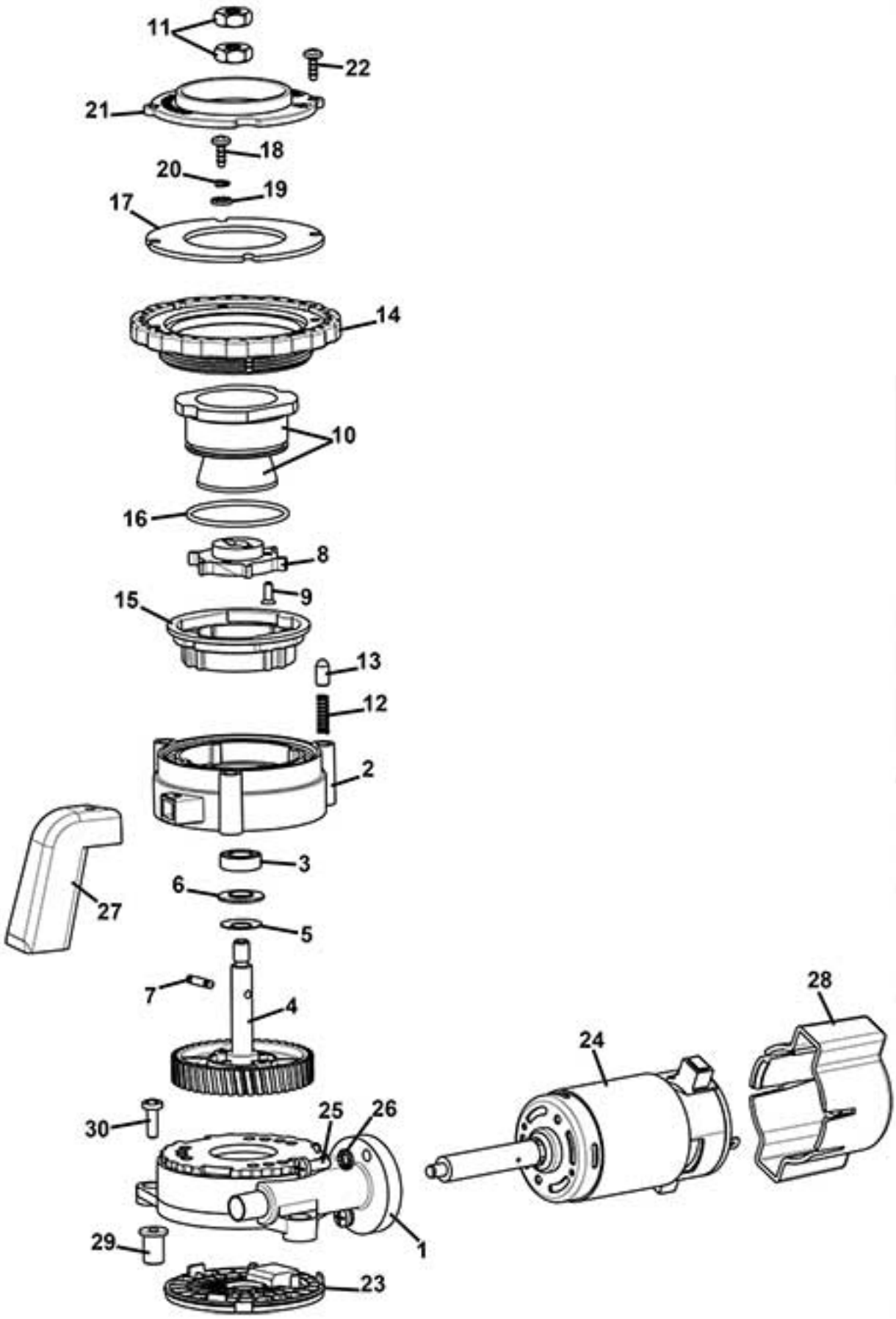

www.rheavendors.com tel: 0039 02 966 551 fax: 0039 02 96 55 086 email: rheavendors@rheavendors.com exclusive property of rheavendors group

GRINDER		
Pos.	**Code**	**Description**
1	Z0320001639NAR	§ MOTOR SUPPORT BLACK+PLUG
2	Z0320001602NAR	GRINDER BLADES SUPPORT
3	VIT0009325	BEARING
4	Z0320001608R	§ WHEEL+SHAFT+MAGNETS
5	Z0320001629	CUP SPRING 16x8,2 SP. 0,4
6	Z0320001625	BUSH
7	Z0320001704	GRINDER ROTATION PIN REINFORCE
8	Z0320001636	EJECTOR
9	VIT0000121	SCREW COUNT FLAT HEAD M3X8
10	Z0320001680	CONIC BLADES PLUS
11	Z0320001642	LOWER GRINDER FIXING NUT
12	Z0320001643	SPRING D.4X15X0,6
13	Z0320001624	REGULATION PIN
14	Z0320001605NAR	§ REGULATION RING NUT BLACK
15	Z0320001635-03NA	GRINDER SUPPORT BLACK
16	GUA0000124	SILICONE OR 2137
17	Z0320001622	UPPER GRINDER FIXING
18	VIT0002469	SCREW HEAD TAP M3.5X10
19	Z0320001666	SPACER D.4x7x2
20	VIT0003103	SPRING WASHER 4,3
21	Z0320001607NA	DUCT BLACK
22	VIT0002010	SCREW ST HEAD CAP M3.5X9.5
23	Z0320001604NA	PLUG BLACK
24	Z0090003047	GRINDER MOTOR 230V DC
25	VIT0000013	SCREW HEAD TAP CAP M4X12
26	VIT0003103	SPRING WASHER 4,3
27	Z0320004736-04	GRINDER CHUTE R.2011
28	Z0320001615NA	GRINDER SENSOR COVER BLACK
29	Z0320001628	NO-VIBRATION BUSH
30	VIT0000012	SCREW HEAD TAP CAP M4X10
100	Z0320001601CL3AL	§GRINDER VRFX 15° BREWER PLUS From pos.1 to pos. 28

www.rheavendors.com tel: 0039 02 966 551 fax: 0039 02 96 55 086 email: rheavendors@rheavendors.com exclusive property of rheavendors group

VARIGRIND

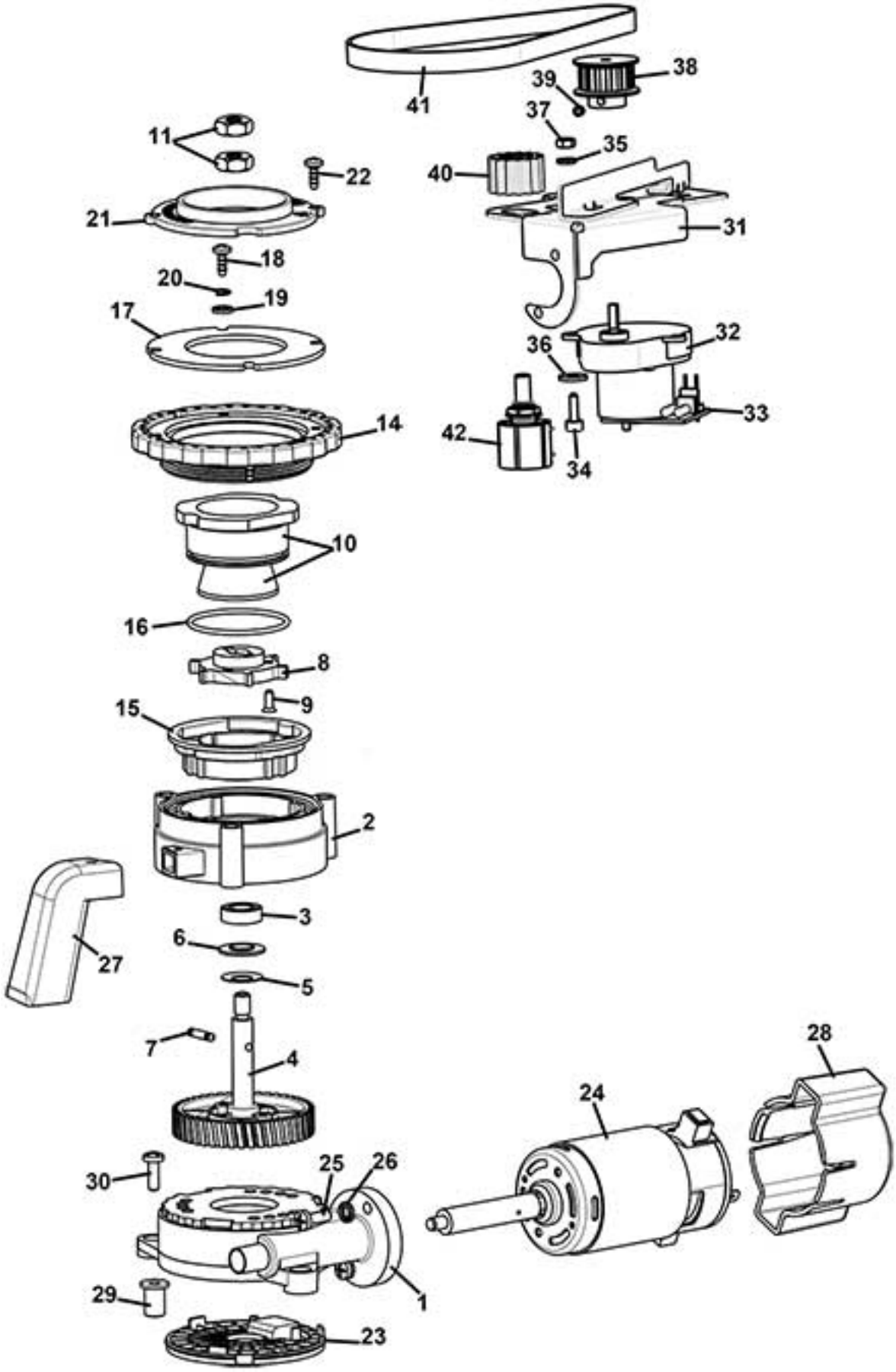

www.rheavendors.com tel: 0039 02 966 551 fax: 0039 02 96 55 086 email: rheavendors@rheavendors.com exclusive property of rheavendors group

VARIGRIND		
Pos.	**Code**	**Description**
1	Z0320001639NAR	§ MOTOR SUPPORT BLACK+PLUG
2	Z0320001602NAR	GRINDER BLADES SUPPORT
3	VIT0009325	BEARING
4	Z0320001608R	§ WHEEL+SHAFT+MAGNETS
5	Z0320001629	CUP SPRING 16x8,2 SP. 0,4
6	Z0320001625	BUSH
7	Z0320001704	GRINDER ROTATION PIN REINFORCE
8	Z0320001636	EJECTOR
9	VIT0000121	SCREW COUNT FLAT HEAD M3X8
10	Z0320001680	CONIC BLADES PLUS
11	Z0320001642	LOWER GRINDER FIXING NUT
14	Z0320001663NA	GRINDER REGULATION RING BLACK
15	Z0320001635-03NA	GRINDER SUPPORT BLACK
16	GUA0000124	SILICONE OR 2137
17	Z0320001622	UPPER GRINDER FIXING
18	VIT0002469	SCREW HEAD TAP M3.5X10
19	Z0320001666	SPACER D.4x7x2
20	VIT0003103	SPRING WASHER 4,3
21	Z0320001607NA	DUCT BLACK
22	VIT0002469	SCREW HEAD TAP M3.5X10
23	Z0320001604NA	PLUG BLACK
24	Z0090003047	GRINDER MOTOR 230V DC
25	VIT0000013	SCREW HEAD TAP CAP M4X12
26	VIT0003103	SPRING WASHER 4,3
27	Z0320004736-04	GRINDER CHUTE R.2011
28	Z0320001615NA	GRINDER SENSOR COVER BLACK
29	Z0320001628	NO-VIBRATION BUSH
30	VIT0000012	SCREW HEAD TAP CAP M4X10
31	Z0320001672	GRINDER GEARBOX MOTOR SUPPORT
32	Z0090002042R	§ GEAR MOTOR 2,2RPM24VDC+FILT
33	SCH0003740	MOTOR FILTER
34	VIT0005519	SCREW TCEI 4x12 STAIL STEEL
35	VIT0003103	SPRING WASHER 4,3
36	VIT0003301	WASHER 4,3X12X1,5
37	VIT0004803	NUT M4
38	Z0320001654	GRINDER PULLEY
39	VIT0007011	SET SCREW 4X4
40	Z0320001670	PULLEY POTENTIOMETER from serial 20204430247
41	Z0320001657	GRINDER BELT
42	CBLXS00317	VARIGRINDER WIRING from serial 20204430247
100	Z0320001671CL3	§VARIGRINDER VARIFLEX 15° From pos.1 to pos. 42 excluded pos.29+30
101	Z0320001670R	§PULLEY POTENTIOMETER+WIRING pos.40+42 Up to serial 20204430246

www.rheavendors.com tel: 0039 02 966 551 fax: 0039 02 96 55 086 email: rheavendors@rheavendors.com exclusive property of rheavendors group

PRO BREWER SUPPORT+MOTOR

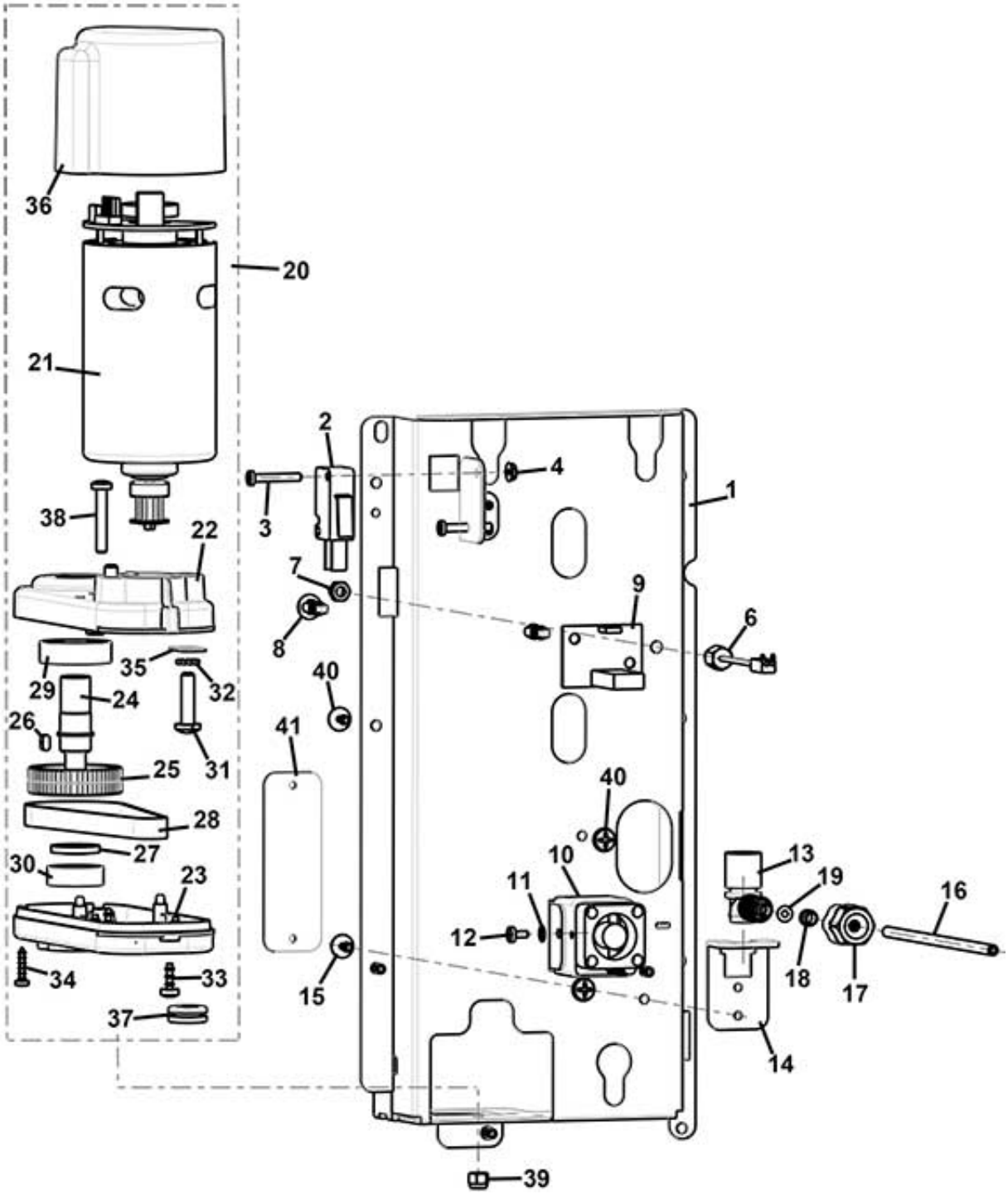

www.rheavendors.com tel: 0039 02 966 551 fax: 0039 02 96 55 086 email: rheavendors@rheavendors.com exclusive property of rheavendors group

PRO BREWER SUPPORT+MOTOR		
Pos.	**Code**	**Description**
1	Z0260014002	VARIFLEX BREWER SUPPORT
2	ELE0001522	MICROSWITCH
3	VIT0000006	SCREW HEAD TAP CAP M3X16
4	VIT0004701	NUT M3
6	ELE0000931	PROBE NTC 10K/TE
7	VIT0004816	NUT M4
8	ELE0062020	BOARD SUPPORT
9		Heater board sold with code ELE0000467-02
10	ELE0000467-02	FAN HEATER 24V DC + BOARD
11	VIT0003102	SPRING WASHER 3,2
12	VIT0000002	SCREW HEAD TAP CAP M3X6
13	Z0250014084-02	FEMALE CONNECTOR
14	Z0260014009-01	H2O CONNECTOR SUPPORT
15	VIT0002009	SCREW ST HEAD CAP M3.5X6.5
16	TTEF02/04T	PTFE PIPE 2X4
17	Z0250014086	NUT
18	Z0100002014	LOCKING RING SO1-4
19	GUA0000061	OR 2010 VITON 80 BLACK
20	Z0090002250R	§ VARIFLEX BREW. GEARBOX MOTOR From pos. 21 to pos. 37 (new version components)
21	Z0090002252-01	§ MOTOR 24V DC New version
22	Z0090002222NA	MOTOR UPPER CASE RAL9005 New version
23	Z0090002223NA	MOTOR LOWER CASE RAL9005 New version
24	Z0090002224	FEMALE CONNECTOR SHAFT
25/a	Z0090002255AN	PULLEY New version from serial 20154600000
25/b		For machine built before Serial n. 20154599999 pls order motor Z0090002250R
26	VIT0006703	CLAMP
27	Z0090002226	SPACER
28/a	Z0090002258	BELT New version from serial 20154600000
28/b		For machine built before Serial n. 20154599999 pls order motor Z0090002250R
29	VIT0009324	BEARING
30	VIT0009320	BEARING
31	VIT0000017	SCREW HEAD TAP CAP M5X20
32	VIT0003104	SPRING WASHER 5,3
33	VIT0002469	SCREW HEAD TAP M3.5X10
34	VIT0002014	SCREW ST HEAD CAP M2.9X13
35	Z0090002240	MOTOR SPACER
36	Z0090002235CK	MR GV BOARD COVER R.7037
37	GUA0010501	ELECTRICAL GROMMET DG 7,5
38	VIT0000015	SCREW HEAD TAP CAP M4X25
39	VIT0004815	NUT M4
40	VIT0002401	SCREW ST HEAD CAP M3.5X9.5
41	Z0260014004	HEATER PLUG
100	Z0250014086R	§ WATER INLET TUBE From pos. 16 to pos. 19
101	Z0090002224R	§ FEMALE CONNECTOR SHAFT From pos.24 to pos.30 excluded pos.28

www.rheavendors.com tel: 0039 02 966 551 fax: 0039 02 96 55 086 email: rheavendors@rheavendors.com exclusive property of rheavendors group

PROFESSIONAL BREWER GROUP D.45

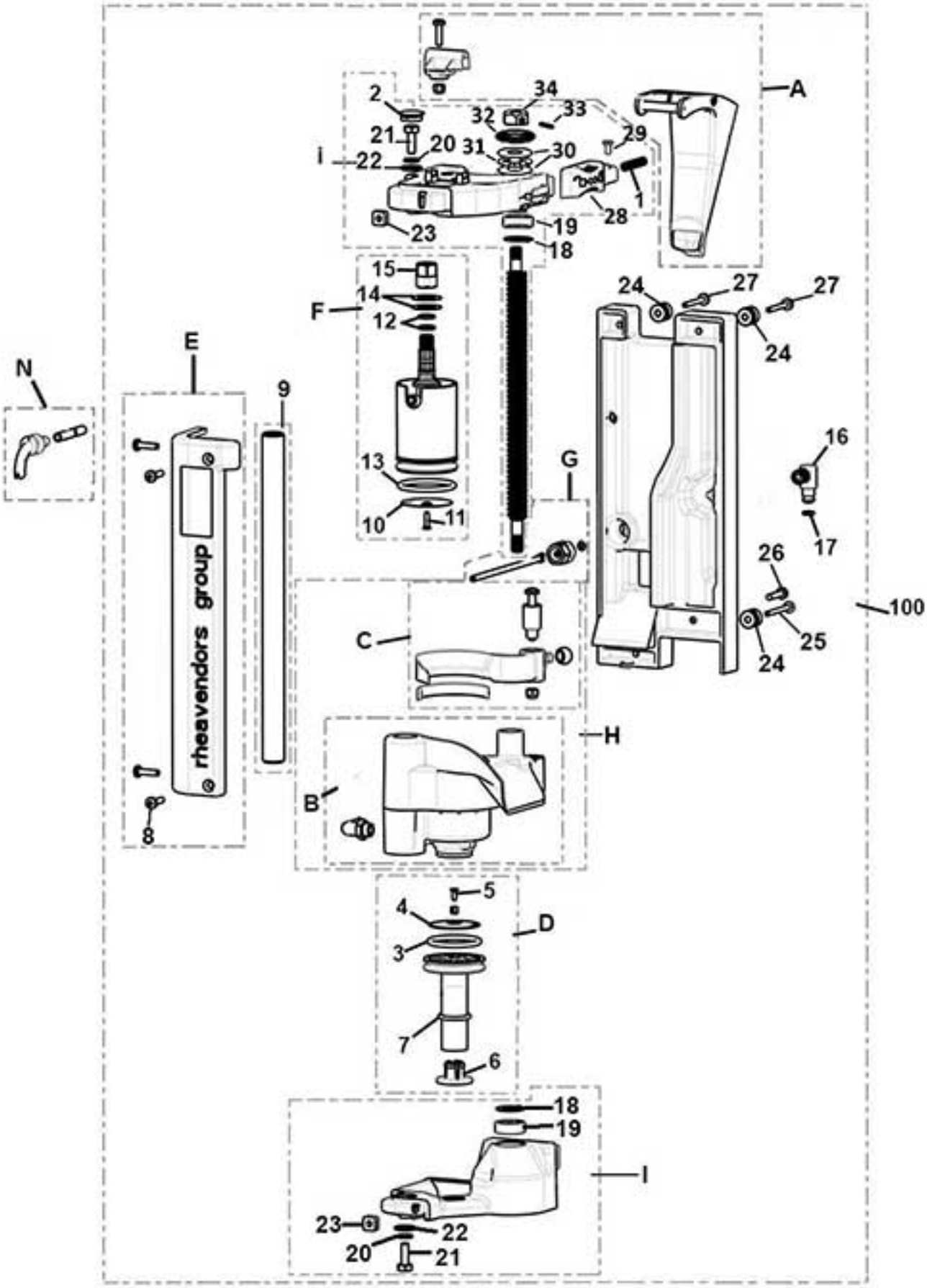

www.rheavendors.com tel: 0039 02 966 551 fax: 0039 02 96 55 086 email: rheavendors@rheavendors.com exclusive property of rheavendors group

PROFESSIONAL BREWER GROUP D.45		
Pos.	**Code**	**Description**
A	Z0250014008R	§ CHUTE D. 45
1	Z0250014081	SPRING
2	GUA0011022	PLUG
B	Z0250014022R	§ INFUSION CHAMBER D.45 included internal components and elbow
C	Z0250014024R	§ BRUSH D.45
D	Z0250014028R	§ LOWER FILTER HOLDER D.45
3	GUA0000097	OR 4131 RED SILICONE LSR70
4	Z0250014029	COFFEE FILTER DIAM. 37.3
5	VIT0000121	SCREW COUNT FLAT HEAD M3X8
6	Z0250014027R1	LOWER PISTON LOCK+SET SCREW
7	GUA0000103	OR 3075 SILICON
E	Z0250014019R	§ FRONTAL COVER
8	VIT0001009	SCREW HEAD TAP CAP M4X16
9	Z0250014013-04	CYLINDRICAL GUIDE
F	Z0250014045R	§ UPPER FILTER HOLDER D.45
10	Z0250008211	COFFEE FILTER D 37.3
11	VIT0000129	SCREW COUNT HEAD M3X12
12	GUA0000045	OR 108 VITON 80 BLACK
13	GUA0000067	OR 4143 RED SILICONE LSR70
14	Z0250014048	SPRING
15	Z0250014086	NUT
16	Z0250014085	MALE CONNECTOR
17	GUA0000004	OR 104 NBR AL 75 BLACK
G	Z0250014086R	§ WATER INLET TUBE
H	Z0250014020R	§ INFUSION CHAMBER D.45
I	Z0250014005R2	§UPPER SUPPORT WITHOUT CHUTE
L	Z0250014012R	§ LOWER SUPPORT
18	Z0250014077	SPACER
19	VIT0009320	BEARING
20	VIT0003113	SPRING WASHER 6,4
21	VIT0000249	SCREW HEX HEAD M6X16
22	Z0250014079	WASHER D.15 D.6,5 SP.1,5
23	VIT0009112	NUT M4
24	Z0250014072	PIN
25	VIT0000033	SCREW HEAD TAP CAP M4X35
26	VIT0001011	SCREW HEAD TAP CAP M4X20
27	VIT0001006	SCREW HEAD TAP CAP M4X30
28	Z0250014082	BREWER STOPPER BUTTON
29	VIT0002009	SCREW ST HEAD CAP M3.5X6.5
30	VIT0009318	SPACER WASHER
31	VIT0009317	BEARING
32	GUA0001007	V RING GASKET VA16
33	VIT0007011	SET SCREW 4X4
34	Z0250014071	NUT M8
N	Z0020039539R	§ SPOUT DELIVERY D.4
100	Z0250014000CL	COFFEE BREWER VARIFLEX D 45

www.rheavendors.com tel: 0039 02 966 551 fax: 0039 02 96 55 086 email: rheavendors@rheavendors.com exclusive property of rheavendors group

PROFESSIONAL BREWER GROUP D.36

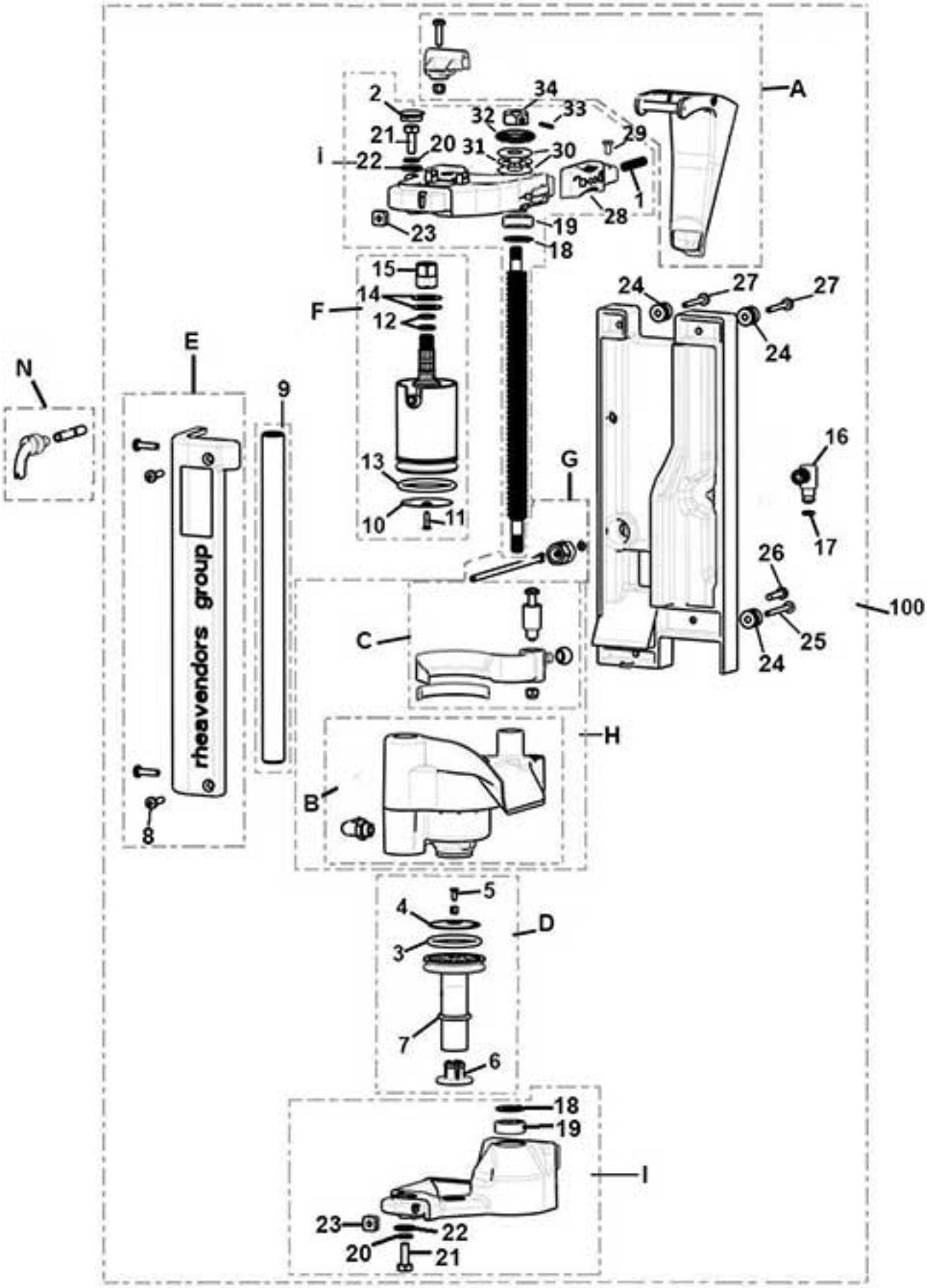

www.rheavendors.com tel: 0039 02 966 551 fax: 0039 02 96 55 086 email: rheavendors@rheavendors.com exclusive property of rheavendors group

PROFESSIONAL BREWER GROUP D.36		
Pos.	**Code**	**Description**
A	Z0250014033R	§ CHUTE D. 36
1	Z0250014081	SPRING
2	GUA0011022	PLUG
B	Z0250014032R	§ INFUSION CHAMBER D.36 included internal components and elbow
C	Z0250014034R	§ BRUSH D.36
D	Z0250014038R	§ LOWER FILTER HOLDER D.36
3	GUA0000080	OR 4112 RED SILICONE LSR70
4	Z0250008019	COFFEE FILTER
5	VIT0000121	SCREW COUNT FLAT HEAD M3X8
6	Z0250014027R1	LOWER PISTON LOCK+SET SCREW
7	GUA0000103	OR 3075 SILICON
E	Z0250014019R	§ FRONTAL COVER
8	VIT0001009	SCREW HEAD TAP CAP M4X16
9	Z0250014013	
F	Z0250014040R	§ UPPER FILTER HOLDER D.36
10	Z0250008099	COFFEE FILTER
11	VIT0000129	SCREW COUNT HEAD M3X12
12	GUA0000045	OR 108 VITON 80 BLACK
13	GUA0000080	OR 4112 RED SILICONE LSR70
14	Z0250014048	SPRING
15	Z0250014086	NUT
16	Z0250014085	MALE CONNECTOR
17	GUA0000004	OR 104 NBR AL 75 BLACK
G	Z0250014086R	§ WATER INLET TUBE
H	Z0250014030R	§ CHAMBER D.36
I	Z0250014005R2	§UPPER SUPPORT WITHOUT CHUTE
L	Z0250014012R	§ LOWER SUPPORT
18	Z0250014077	SPACER
19	VIT0009320	BEARING
20	VIT0003113	SPRING WASHER 6,4
21	VIT0000249	SCREW HEX HEAD M6X16
22	Z0250014079	WASHER D.15 D.6,5 SP.1,5
23	VIT0009112	NUT M4
24	Z0250014072	PIN
25	VIT0000033	SCREW HEAD TAP CAP M4X35
26	VIT0001011	SCREW HEAD TAP CAP M4X20
27	VIT0001006	SCREW HEAD TAP CAP M4X30
28	Z0250014082	BREWER STOPPER BUTTON
29	VIT0002009	SCREW ST HEAD CAP M3.5X6.5
30	VIT0009318	SPACER WASHER
31	VIT0009317	BEARING
32	GUA0001007	V RING GASKET VA16
33	VIT0007011	SET SCREW 4X4
34	Z0250014071	NUT M8
N	Z0020039539R	§ SPOUT DELIVERY D.4
100	Z0250014060CL	§ COFFEE BREWER VARIFLEX D.36

www.rheavendors.com tel: 0039 02 966 551 fax: 0039 02 96 55 086 email: rheavendors@rheavendors.com exclusive property of rheavendors group

products container

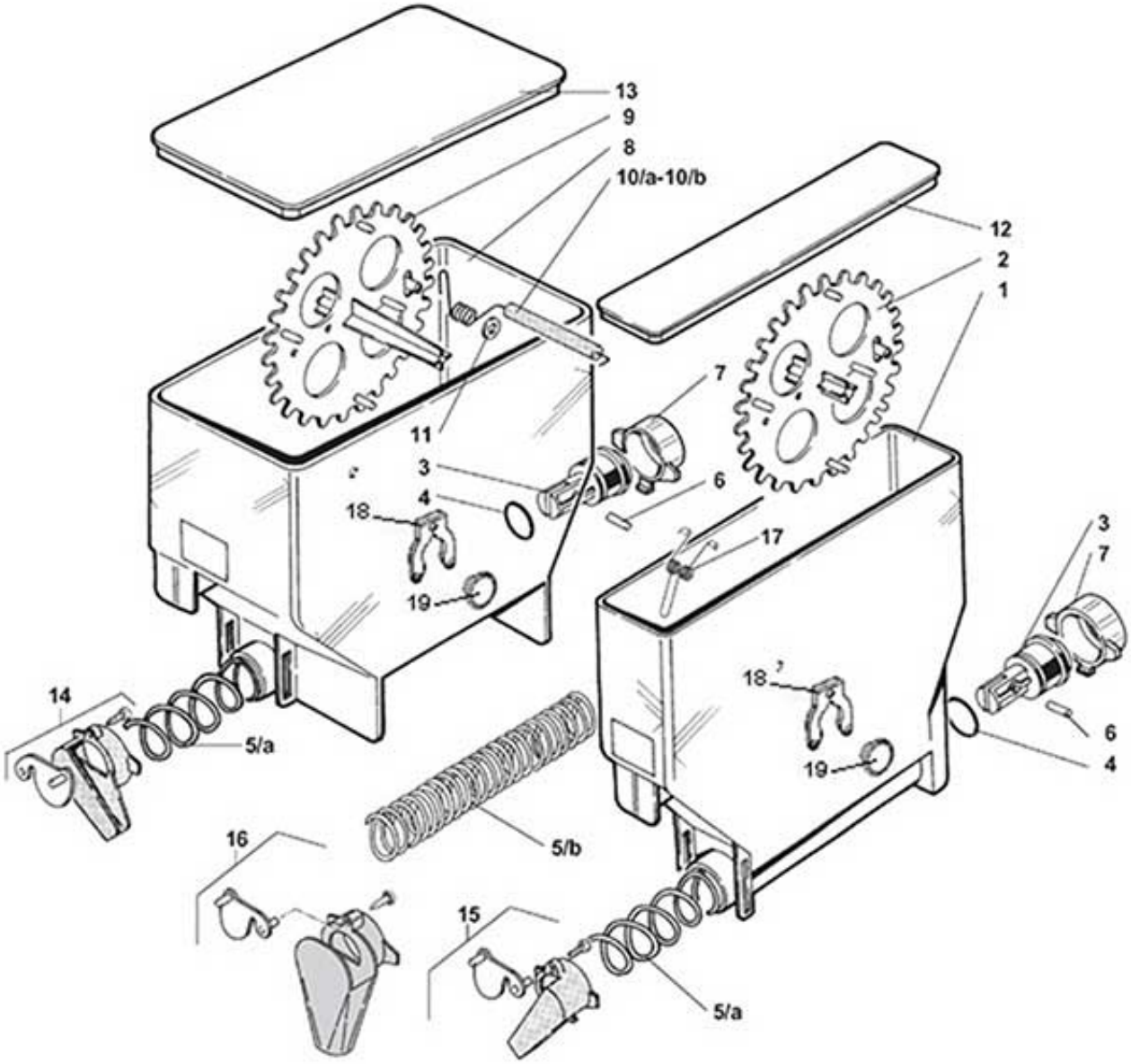

www.rheavendors.com tel: 0039 02 966 551 fax: 0039 02 96 55 086 email: rheavendors@rheavendors.com exclusive property of rheavendors group

products container		
Pos.	**Code**	**Description**
1	Z0230030500	INGREDIENT CANISTER 54 190
2	Z0230030236AB	§ WHEEL MM54
3	Z0230030012	SPIRAL PIN
4	GUA0000083	OR 123 RED SILICONE A70
5/a	Z0230030014	SPIRAL 18
5/b	Z0230030013	SPIRAL 9
6	VIT0005106	PIN 2X14
7	Z0230030011	REAR BUSH
8	Z0230030520	INGREDIENT CANISTER 110-190
9	Z0230030237AB	§ WHEEL MM110
10/a	Z0230030064	AGITATOR 112 - RIGHT OUTLET
10/b	Z0230030062	AGITATOR 112 - LEFT OUTLET
11	VIT0003210	WASHER 8,4X16X1,6
12	Z0230030156	CANISTER 54 LID
13	Z0230030158	CANISTER 110 LID
14/a	Z0230030058R	§ INGRED. CHUTE-RIGHT ORANGE
14/b	Z0230030044R	§ INGREDIENT CHUTE-RIGHT RED
15/a	Z0230030057R	§ INGREDIENT CHUTE-LEFT ORANGE
15/b	Z0230030043R	§ INGREDIENT CHUTE-LEFT RED
16	Z0230030059R	§ INGRED. CHUTE-FRONTALORANGE
17	Z0230030060-05	MIXER
18	Z0230030239	WHEEL PIN FORK
19	Z0230030238-02	WHEEL PIN
100	Z0230030522R	§ CAN. 110-190 AGIT.18 W/LID-R
101	Z0230030525R	§ CAN. 110-190 AGIT.18 W/LID-L
102	Z0230030506R	§ CANIS. 54-190 WHEEL18 W/LID
103	Z0230030502R	§ CANIS. 54-190 WHEEL9 W/LID

www.rheavendors.com tel: 0039 02 966 551 fax: 0039 02 96 55 086 email: rheavendors@rheavendors.com exclusive property of rheavendors group

coffee beans container

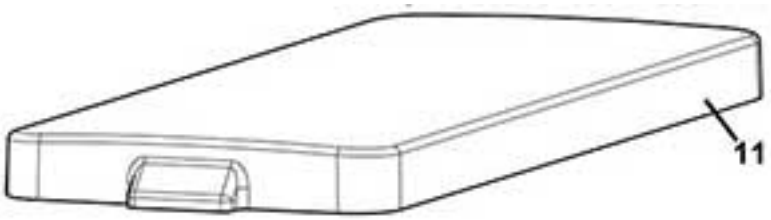

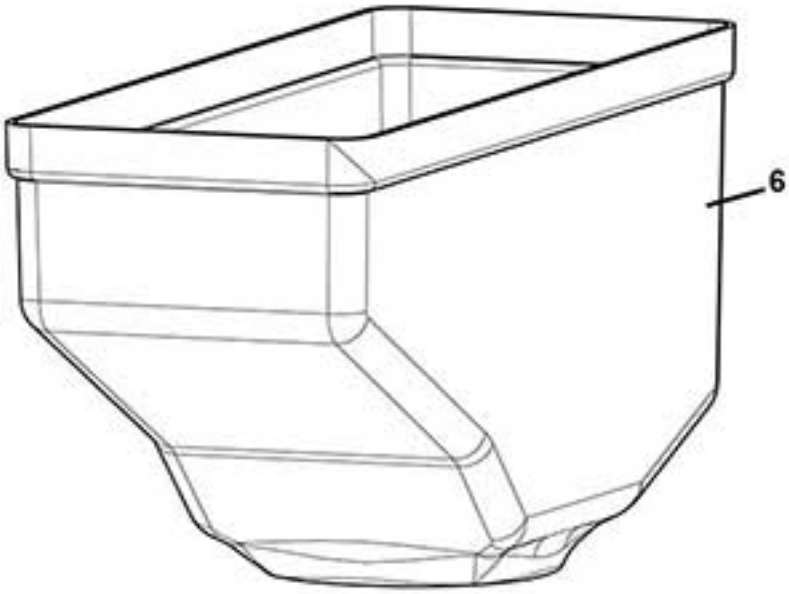

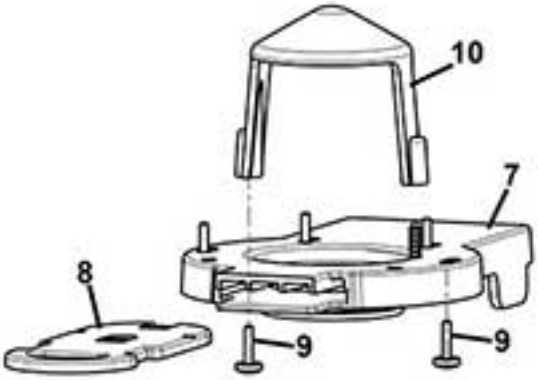

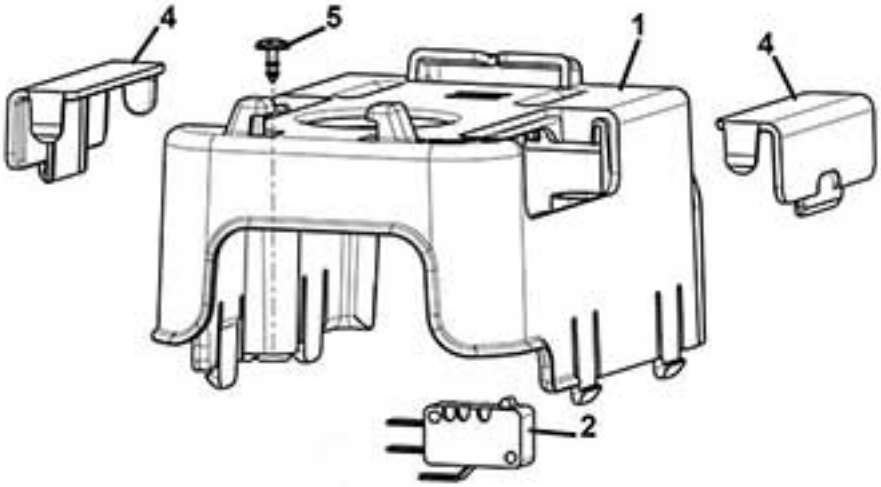

www.rheavendors.com tel: 0039 02 966 551 fax: 0039 02 96 55 086 email: rheavendors@rheavendors.com exclusive property of rheavendors group

coffee beans container		
Pos.	**Code**	**Description**
1/a	Z0230015738-03	GRINDER COVER
1/b	Z0230015743NA	GRINDER COVER VARIGRIND
2/a	ELE0001522CL	§ MICROSWITCH + LEVER + FASTON
2/b	ELE0001535CLR	§MICROSWITCH GRINDER SAFETY
4	Z0230015229-02	REGULATION COVER
5	VIT0002401	SCREW ST HEAD CAP M3.5X9.5
6	Z0230015158	COFFEE BEANS HOPPER
7	Z0230015231-02	COFFEE BEANS HOPPER ADAPTOR
8	Z0230015224IC	COFFEE BEANS HOPPER STOPPER
9	VIT0002114	SCREW COUNT FLAT HEAD M3.5X16
10	Z0230015227TR	GRINDER COVER
11	Z0230015159	COFFEE BEANS HOPPER LID
100	Z0230015232CL4	§ COFFEE BEANS HOPPER From pos.6 to pos.11

www.rheavendors.com tel: 0039 02 966 551 fax: 0039 02 96 55 086 email: rheavendors@rheavendors.com exclusive property of rheavendors group

OPTIONAL KIT

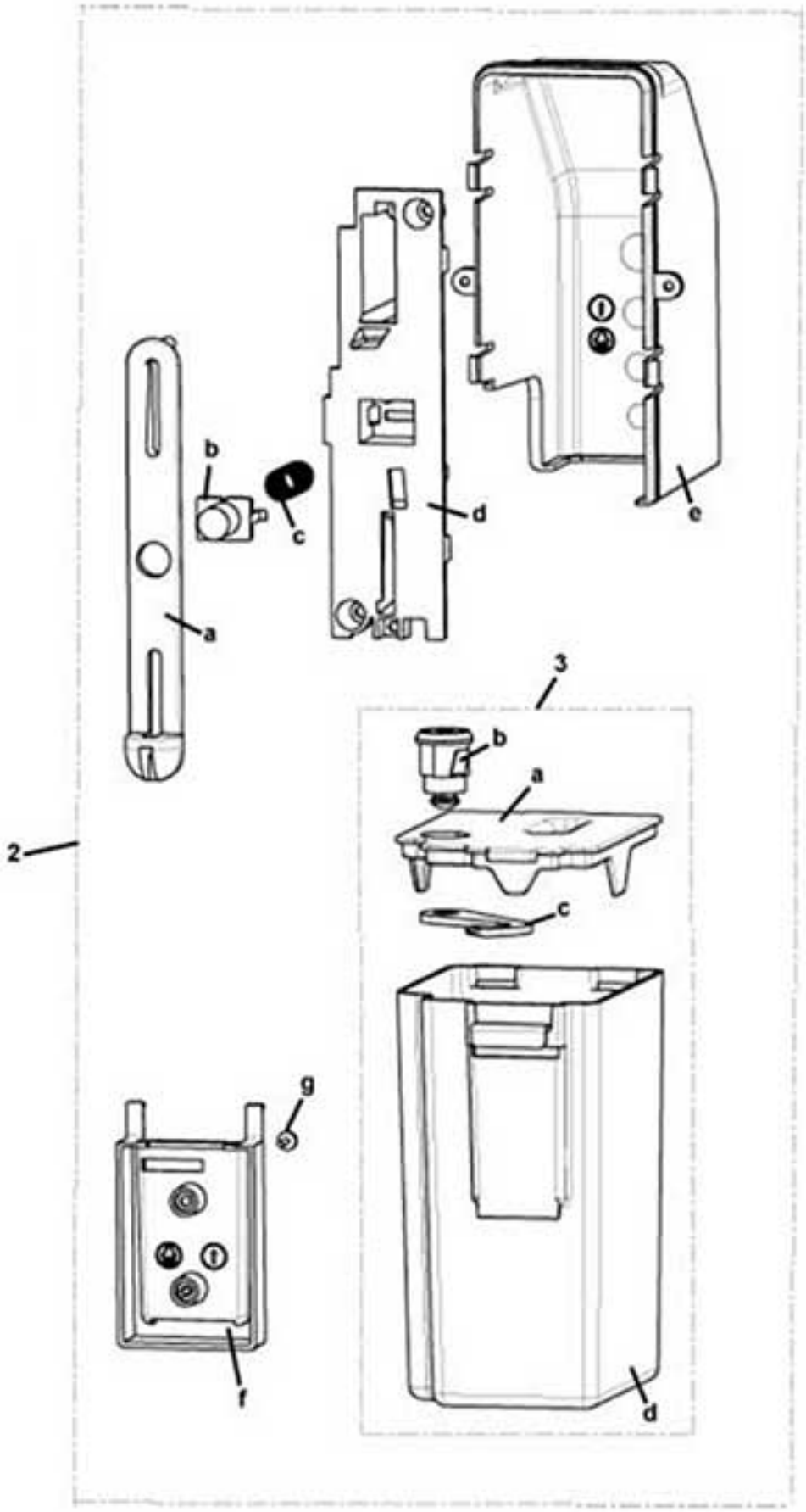

www.rheavendors.com tel: 0039 02 966 551 fax: 0039 02 96 55 086 email: rheavendors@rheavendors.com exclusive property of rheavendors group

OPTIONAL KIT		
Pos.	**Code**	**Description**
2_1	D2109600A0000	KIT W/FIT W/O MECH RAL9005
2_2	D2109600A1000	KIT W/FIT W/O MECH RAL9006
2_1/a	Z0020035031NA	COIN ENTRY PLATE BLACK
2_2/a	Z0020035031CM	COIN ENTRY PLATE RAL9006
2/b	Z0020035033CM	COIN RETURN BUTTON RAL9006
2/c	Z0020035034	COIN RETURN BUTTON SPRING
2/d	Z0020035032NA	PAYM SYSTEM SUPPORT
2/e	Z0020039510NA	PAY. SYSTEM COVER BLACK
2/f	Z0020039528NA	COIN BOX SUPPORT
2/g	VIT0002469	SCREW HEAD TAP M3.5X10
3	Z0020039525R	§ COIN BOX
3/a	Z0020039527NA	COINS BOX LID BLACK
3/b	SER0000015	LOCK MM20 C.3430
3/c	Z0020037128	COIN BOX HOOK
3/d	Z0020039526NA	COIN BOX RAL 9005

www.rheavendors.com tel: 0039 02 966 551 fax: 0039 02 96 55 086 email: rheavendors@rheavendors.com exclusive property of rheavendors group

WIRINGS

www.rheavendors.com tel: 0039 02 966 551 fax: 0039 02 96 55 086 email: rheavendors@rheavendors.com exclusive property of rheavendors group

WIRINGS		
Pos.	**Code**	**Description**
1	CBLXS00009	THERMOSTAT EXTENSION WIRING
2	CBLXSC0050	FILTER EXTENSION WIRING
3	CBLXSC0051	FUSE FILTER WIRING
4	CBLXS00032	GROUND WIRING
5	CBLXSC0054	INDUCTION FAN WIRING
6	CBLXSC0007	DOOR WIRING 24V
7	CBLXSC0047	WIRING 24V
8	CBLXS00265	DOOR SWITCH EXTENSION WIRING
9	CBLXS00275	24V ACTUATOR WIRING
10	CBLXSC0002	POWER WIRING 230V
11	CBLXS00263	GRINDER WIRING
12	CBLXS00311	SUPPLY DOOR 5/24V WIRING
13	CBLXSC0045	INDUCTION POWER WIRING
14	CBLXS00276	PUMP WIRING
15	CBLXS00317	VARIGRINDER WIRING
16	CBLXS00209	DOOR SWITCH WIRING
17	CBLXS00228	LED BOARD WIRING
18	CBLXS00278	POWER SUPPLY WIRING
19	CBLXM00108	LOGO ENLIGHTENMENT WIRING
20	CBLXM00109	LIGHTING LABELS SHORT WIRING
21	CBLXM00110	MED LABELS ENLIGHTING WIRING
22	CBLXM00111	LABELS ENLIGHTENMENT WIRING

www.rheavendors.com tel: 0039 02 966 551 fax: 0039 02 96 55 086 email: rheavendors@rheavendors.com exclusive property of rheavendors group